Compact kit residencial spa

English

Contenido

1. Introduction
2. General warnings
3. Components
4. Installation
    4.1. Warnings on the installation and assembly
    4.2. Components location
    4.3. General connections
    4.4. Electrical connection
5. Start-up
    5.1. Filter
6. Operating instructions
    6.1. Operation
    6.2. Systems
    6.3. System control and configuration
    6.4. Jets operation
    6.5. Swimspa control
7. Maintenance
    7.1. Maintenance warnings
    7.2. Filter washing
    7.3. Pre-filter of the pump cleaning
    7.4. Maintenance in periods of non-use or absence
    7.5. Anti-freeze protection
8. Error messages
9. Evidence of conformity

1. Introduction

This manual includes all the information necessary to fully enjoy your SPA. We suggest you take a few minutes to look over the following points.

If you have any questions or doubts on the operation or maintenance of this product, please contact your local installer or dealer. They are specialised professionals with the knowledge to help you enjoy this product.

2. General warnings

- Avoid all contact with electrical voltage.
- Follow all accident prevention regulations.
- Any modification to the equipment requires the prior authorisation from the manufacturer. Original spare parts and accessories authorised by the manufacturer guarantee greater safety. The manufacturer of the equipment is exempt from all liability for damage caused by non-authorised spare parts or accessories.
- During operation, some parts of the equipment are at dangerous electrical voltages. Work on elements or equipment connected to them should only be performed after switching off the power supply and disconnecting the start-up devices.
- The user should ensure that assembly and maintenance work is performed by qualified and authorised persons, who have carefully read the installation and service instructions.
- Safety in operating the machine can only be guaranteed by following and respecting the installation and service instructions.
- Maximum values are indicated in the electrical switchboard and should not be exceeded under any circumstances.
- In the event of a fault or breakdown, contact the Technical Assistance Service of the manufacturer, or the nearest dealer of the manufacturer.
- In this respect, the regulations of each country should be respected.

3. Components

This unit has been designed specifically for residential Spas. The unit has all the elements needed to filter and heat the water, and also provide Spa massages.

The main components of the unit are:

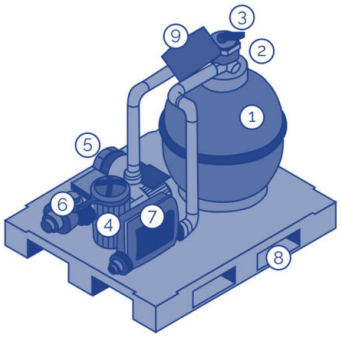

1. Filter
2. Filter pressure gauge
3. Selector valve
4. Filtering pump
5. Air massage pump (blower)
6. Water massage pump/s
7. Digital System - Heater
8. Base of the unit
9. Automatic - Manual Selector of the filtering pump

4. Installation

4.1. Warnings on the installation and assembly

- On connecting the electrical cables to the equipment, care should be taken regarding the layout inside the connection box, check that pieces of cable do not remain inside and that the earth conductor is properly connected.
- Particular care should be taken that water does not, under any circumstances, leak into the pumps or into the live electrical parts.

ATTENTION
This equipment cannot be connected to an ordinary plug.
This equipment requires proper electrical installation.
The connection must be earthed.
Follow domestic electric regulations.

Do not position the equipment anywhere where water could leak into the electrical equipment compartment.
It should be easily accessible for maintenance work.

4.2. Components location

Place the equipment in a room near the Spa. The maximum distance between the equipment and the Spa is 7 Metres, and the minimum distance is 2 metres vertical. If it is not possible to respect these measurements, please consult your supplier.

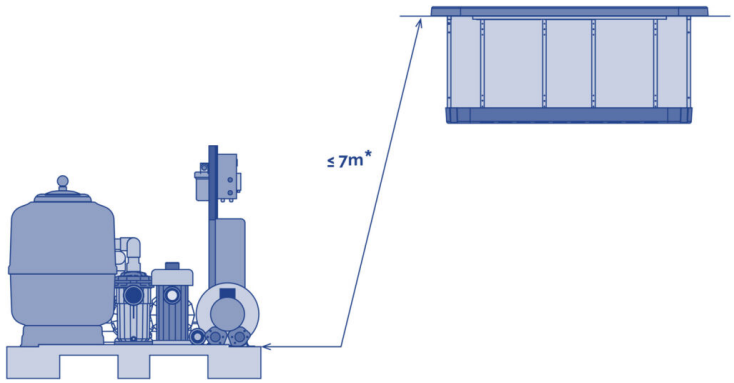

* The maximum distance is the length of the connection piping between the equipment and the Spa.

The compact equipment should be below the level of the Spa. This will avoid having to prime the pumps. It should be a maximum of 3 o 4 metres below the Spa.

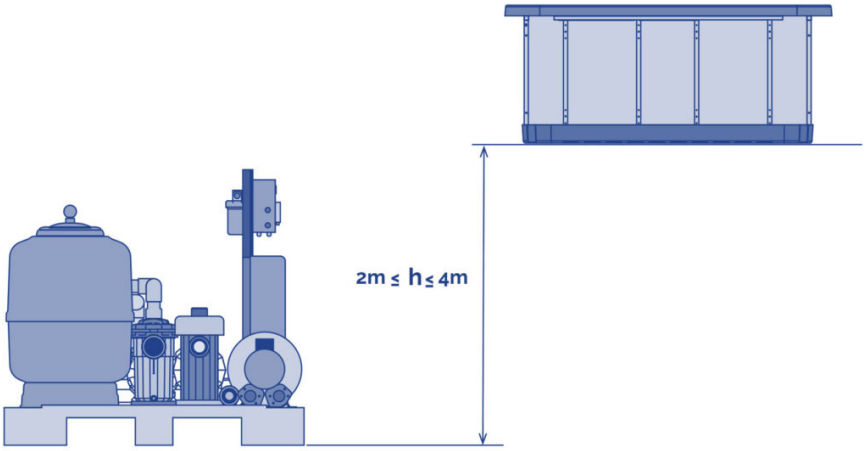

4.3. General connections

PIPING

The following type of piping should be used for the connection:

- Filtering circuit: PN 10 diameter 50 mm*
- Massage circuit (jets): PN 10 diameter 63 mm*
- Air massage circuit: PN 10 diameter 50 mm*

**On standard distance (maximums 7 m) and without losing power charge.*

Follow the diagrams and assembly instructions given below for each circuit.

In any event, the installation of bends and piping should be reduced to a minimum in order to reduce the load loss of the installation.

Always use plastic accessories, gasket and teflon tape for the selector valve connections. Never use steel accessories or piping as they could seriously damage the plastic components.

CIRCUIT DETAIL

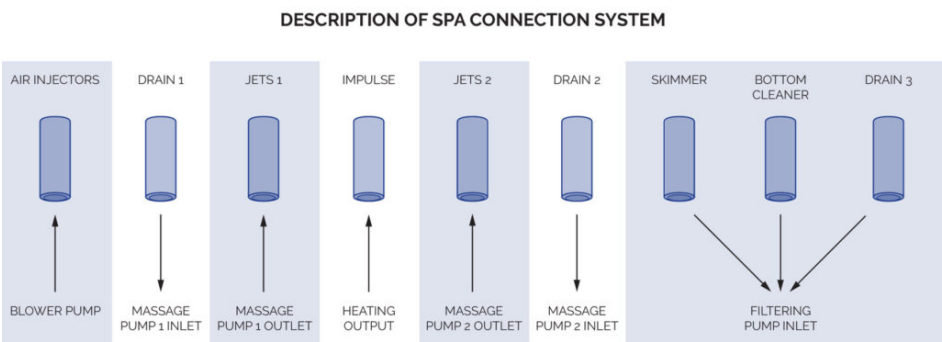

FILTERING CIRCUIT

Connect the suction circuit of the filtering pump to the outlet of the Spa Skimmer, placing two ball valves to stop the water flow if necessary.

Connect the filtering return, the heater outlet, to the impulse inlet of the Spa, placing two ball valves to stop the water flow if necessary.

Make a by-pass in the filtering return circuit to the drain, to enable you to empty this circuit in the event of a breakdown of the heater. It will also be used to empty the spa.

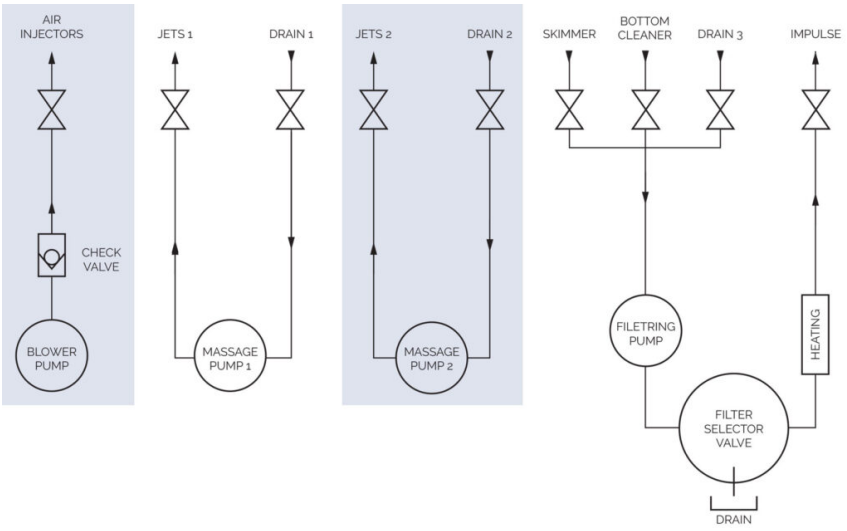

MANOMETER

It is not necessary to use teflon tape, as a joint seals this point. Do not use a tool to tighten the T-part of the pressure gauge, simply tighten it with your hands.

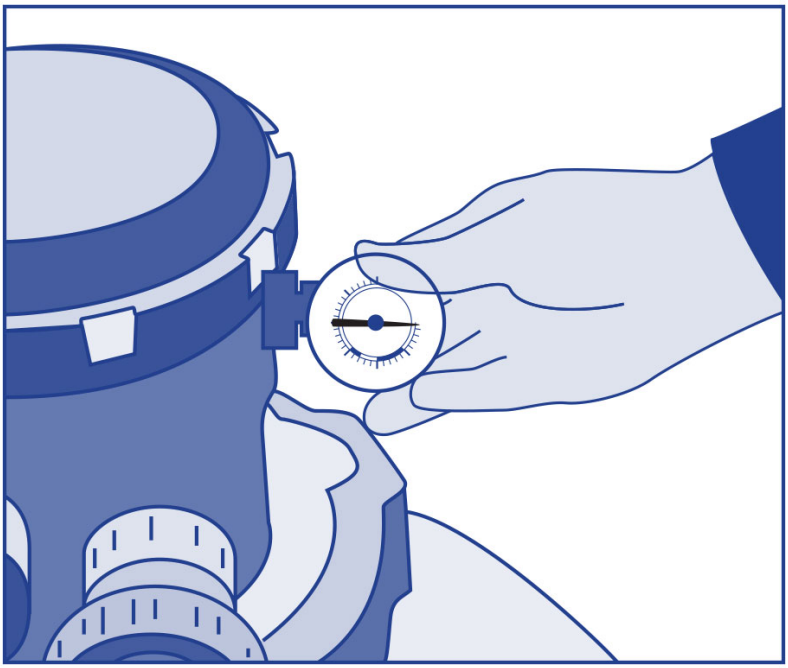

WATER MASSAGE CIRCUIT

Connect the suction circuit of the massage pump to the Sump outlet of the Spa, placing two ball valves to stop the water flow if necessary.

Connect the massage return to the Jets inlet of the Spa, placing two ball valves to stop the water flow if necessary.

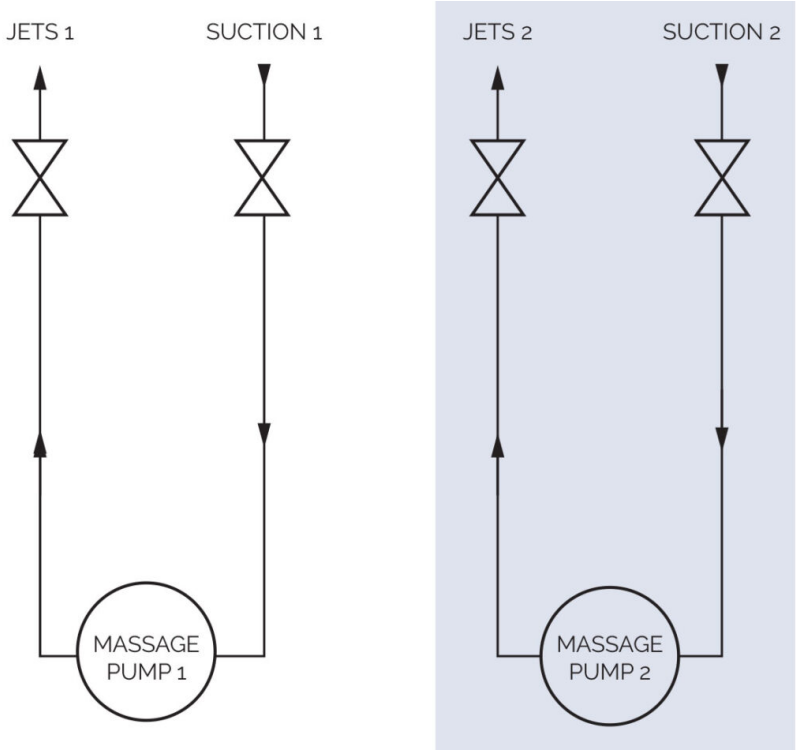

AIR MASSAGE CIRCUIT

The piping of the air circuit should be fitted with a siphon 150 mm above the maximum water level of the spa, placing an anti-return valve between the this siphon and the Spa, as indicated in the connection diagram.

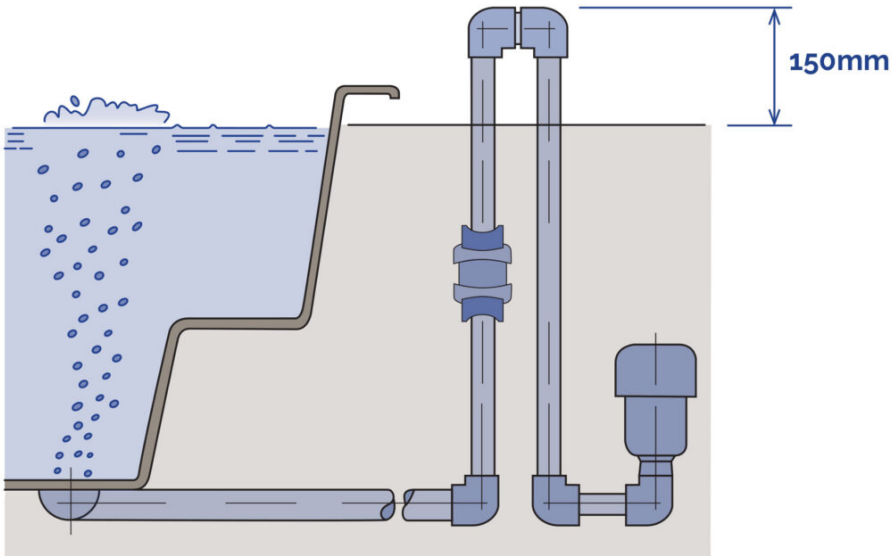

4.4. Electrical connection

- This equipment cannot be connected to an ordinary plug.
- This equipment requires proper electrical installation. This should be performed by a
- specialist following the electrical safety regulations in each country.
- The connection must be earthed.
- Use a suitable cable section bearing in mind the power of the Spa and distance from the switchboard.
- Always follow the instructions indicated in: Safety Warnings of this manual.

- Do not connect the electrical equipment (differential switch in the ON position) if the Spa is empty.

WARNING
Do not try to access any electrical component unless you are qualified or are the Head of Maintenance.
Never access electrical elements with wet feet.

DIFFERENTIAL SWITCH INSTALATION

The electrical installation should be fitted with a 2-pole, high sensitivity differential switch in the general current input panel (the differential switch is not supplied with the Spa).

ATTENTION
It is essential that the owner of the Spa checks and resets the differential switch from time to time to check its good working order. It is recommended to do this at least once a month.

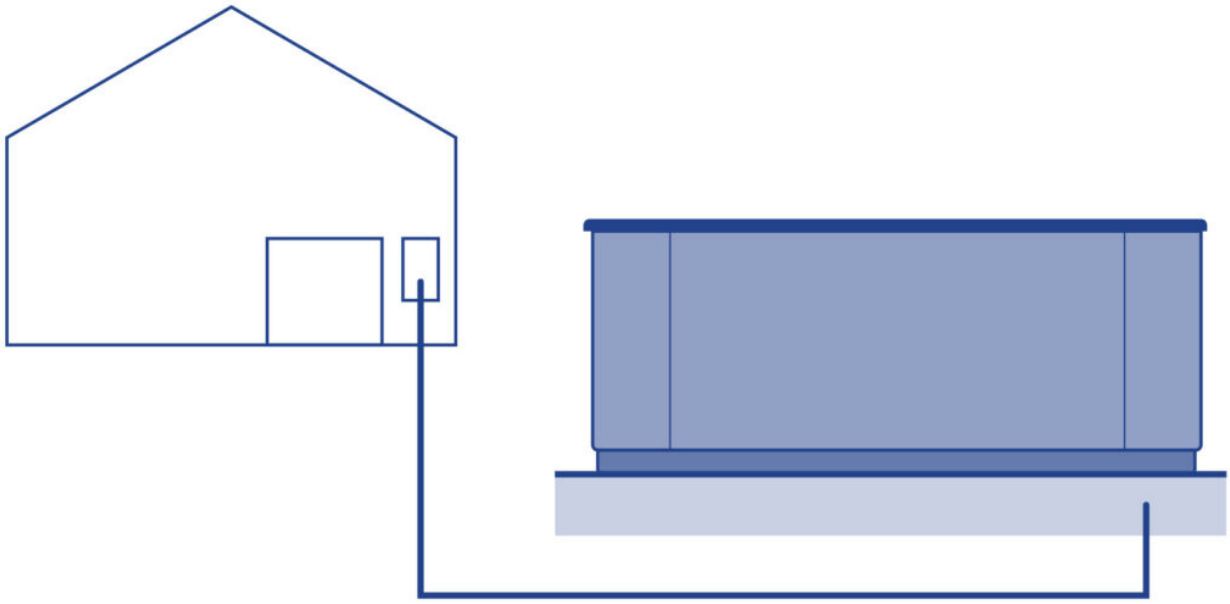

Check that the differential switch is in the OFF position. Do not place the differential switch in the ON position until the Spa is full of water.

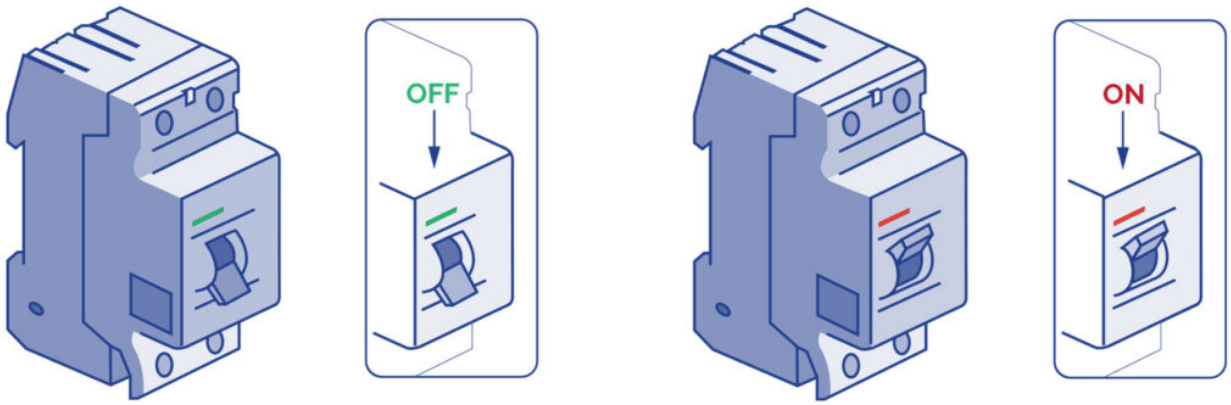

Connecting the differential switch to the Kit

Before doing any work on the kit, the electrical power supply should be switched off (differential

switch in the OFF position, or disconnect the cable from the mains).

Use appropriate cable from the differential switch to the electrical cabinet of the kit, depending on the type of location where the kit is to be installed, and current applicable law. The cable section will be different depending on the model of kit and the distance of the installation.

HIGH AMP / LOW AMP CONFIGURATION

Depending on the configuration of the kit, the consumption of electricity can vary considerably, and as a result, the installation should match the electric power required.

LOW AMP

This configuration disconnects the electric heater when any massage pump is started-up. This configuration limits the electricity consumption.

Note: *LOW AMP is the standard default configuration.*

HIGH AMP

With this configuration, all the elements of the kit can operate at the same time. This configuration uses a greater amount of electricity.

LOW AMP / HIGH AMP configurations can be changed using the switches on the electric panel. The configuration options of the electric panel are shown further on in this Manual. For High Amp you should put A2-A3-A4 in On position and A5 in Off position like the picture below.

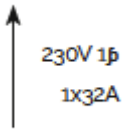

SWITCHBANK S1 OFF		**SWITCHBANK S1 ON**
DON’T ADD 1 HS PUMP W/HTR	A2??	ADD 1 HS PUMP WITH HEAT
DON’T ADD 2 HS PUMPS W/HTR	??A3	ADD 2 HS PUMPS WITH HEAT
DON’T ADD 4 HS PUMPS W/HTR	??A4	ADD 4 HS PUMPS WITH HEAT
SPECIAL AMPERAGE RULE A	??A5	SPECIAL AMPERAGE RULE B

LIST OF SECTION, DISTANCE AND POWER REQUIRED

To determine the section of the electrical installation leads, see the values given in the, before mentioned, Electrical Specifications together with the following table:

KW required

2,1	2,5	2,8	3,2	3,5	4,4	5,3	6,2	7,0	7,9	8,8

Nominal section of the cable in mm^2

Distancia											
6-11 m	2,5	2,5	2,5	2,5	4	4	6	10	10	10	10

11-15 m	2,5	2,5	4	4	4	6	6	10	10	10	10
15-20 m	4	4	4	6	6	6	10	10	10	16	16

For greater distances increase the cable section proportionally.

There may be configurations which require the installation of 1 line of 16 A, 1 line of 32 A to cover the power required by the Spa.

The configuration options of the electrical panel are given further on in this Manual.

Please remember that the installation and electrical configuration changes can only be performed by qualified people and always following the current regulations in each country.

The manufacturer is not liable, under any circumstances, for damage caused by incorrect installation or performed by non-qualified people.

ATTENTION
Bear in mind the position of the maximum consumption Switch.
If you do not use cable suitable for the distance and power of the Kit, it will not work properly and may cause overheating in the electrical circuits with the risk of an electrical accident.
Always use the cable with a section suitable to maximum consumption. In the event of doubt between two values, always use the cable with greater section.

To connect the power supply of the Kit, locate the free packing gland at one end of the Automatic - Manual Selector panel.

Make sure that there is no electrical current in the connection cable (differential switch in the OFF position).

Take the cable to the panel of the Kit.

SINGLE LINE (1 X 16 A) LOWAMP OR (1 X 32 A) HIGHAMP:

Open the cabinet of the Automatic - Manual Selector, insert the cable through the free packing gland and connect the Neutral marked with N, the line or phase to the terminal marked L and the earth in the special, green and yellow, earth terminal.

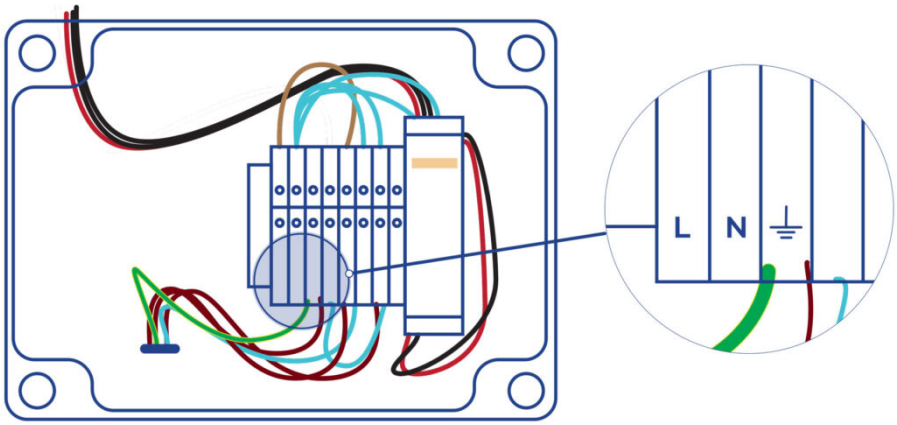

With the HIGH AMP option, the heater of the compact equipment always operates when temperature is required (meaning a higher electrical consumption).

With the LOW AMP option, the heater is limited to the filtering cycles (reducing electrical consumption to a minimum).

WARNING
Correct earthing connection is essential
The earthing circuit of the building should be in perfect condition at all times to guarantee the safety of the Spa user. If you have any doubts, ensure that the earthing circuit is checked by qualified professionals. The manufacturer is not liable for any possible damage or risks caused by unsuitable maintenance of the earthing circuit.

5. Start-up

ATTENTION
Fill the spa and check that all components work without leaks, before filling the sand filter.

5.1. Filter

For maximum performance of the filter, it is recommended to use sand with a granulometry of 0.4 to 0.8 mm. The amount to use is indicated on the specifications plate of the filter.

To correctly fill the filter, follow the steps indicated below:

1. Remove the cover and the filter joint, taking care not to damage the joint.

2. Check that all collector arms are in good condition.

3. Carefully fill with water halfway.

4. Pour in the sand contents indicated on the label, taking care to protect the diffuser and avoiding damage to the collector arms.

5. Remove the protection from the diffuser and place the cover, having first cleaned the sand and waste from the closing area.

6. Fill the Spa with water.

7. Wash the filter so that it is ready for operation.

ATTENTION
During the filling process, ensure that water does not leak into electrical parts.
Sea water in the Spa will quickly lead to general deterioration of all components of the circuit.
Do not fill the Spa will water warmer than 50ºC, as this may trigger the safety thermostat and damage equipment and connections.

Once the Spa is full of water, connect the electrical equipment by placing the differential switch in the ON position. (See Electrical Connection section).

Check that the differential switch works correctly. Press the test button and the differential switch should automatically go from the ON position to the OFF position.

6. Operating instructions

6.1. Operation

The compact equipment enables you to perform several operations. They are all controlled by the Automatic-Manual Selector and the filter selector valve.

AUTOMATIC

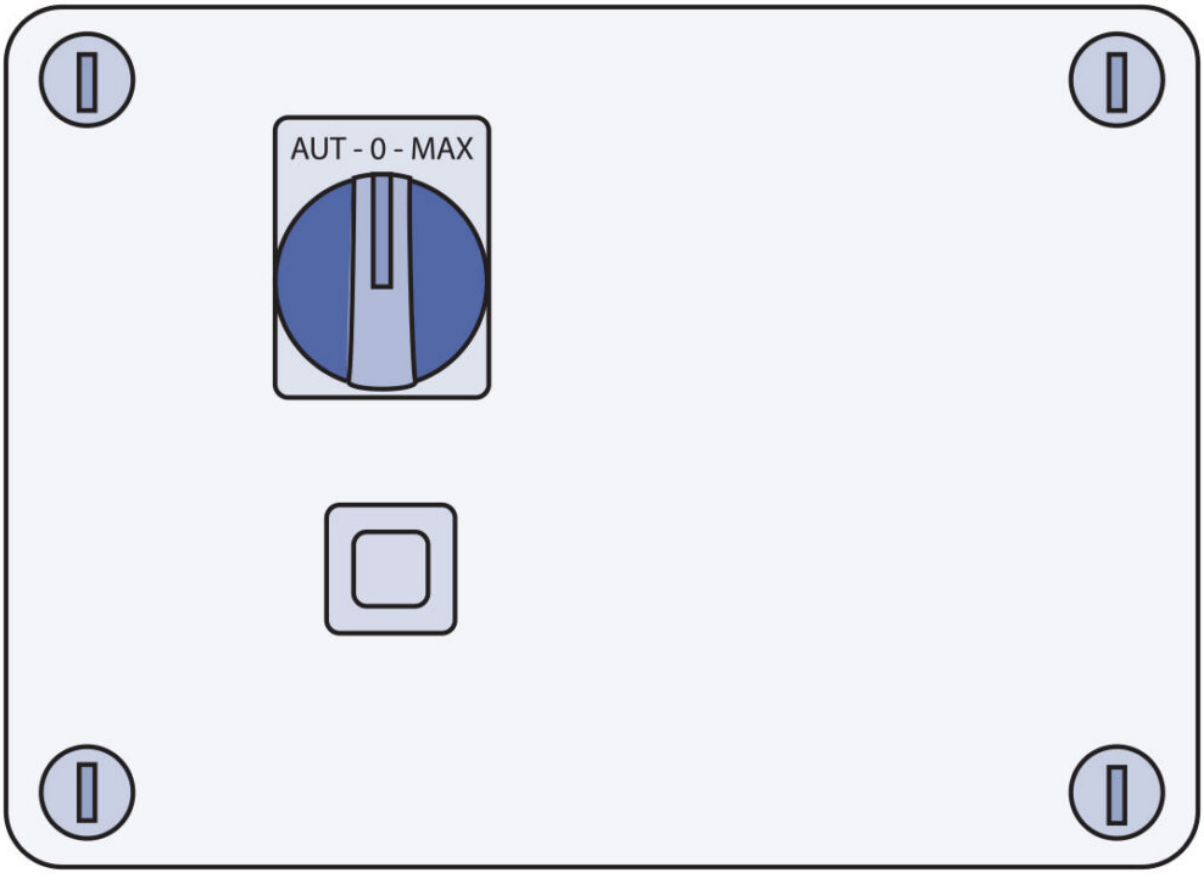

MANUAL SELECTOR VALVE

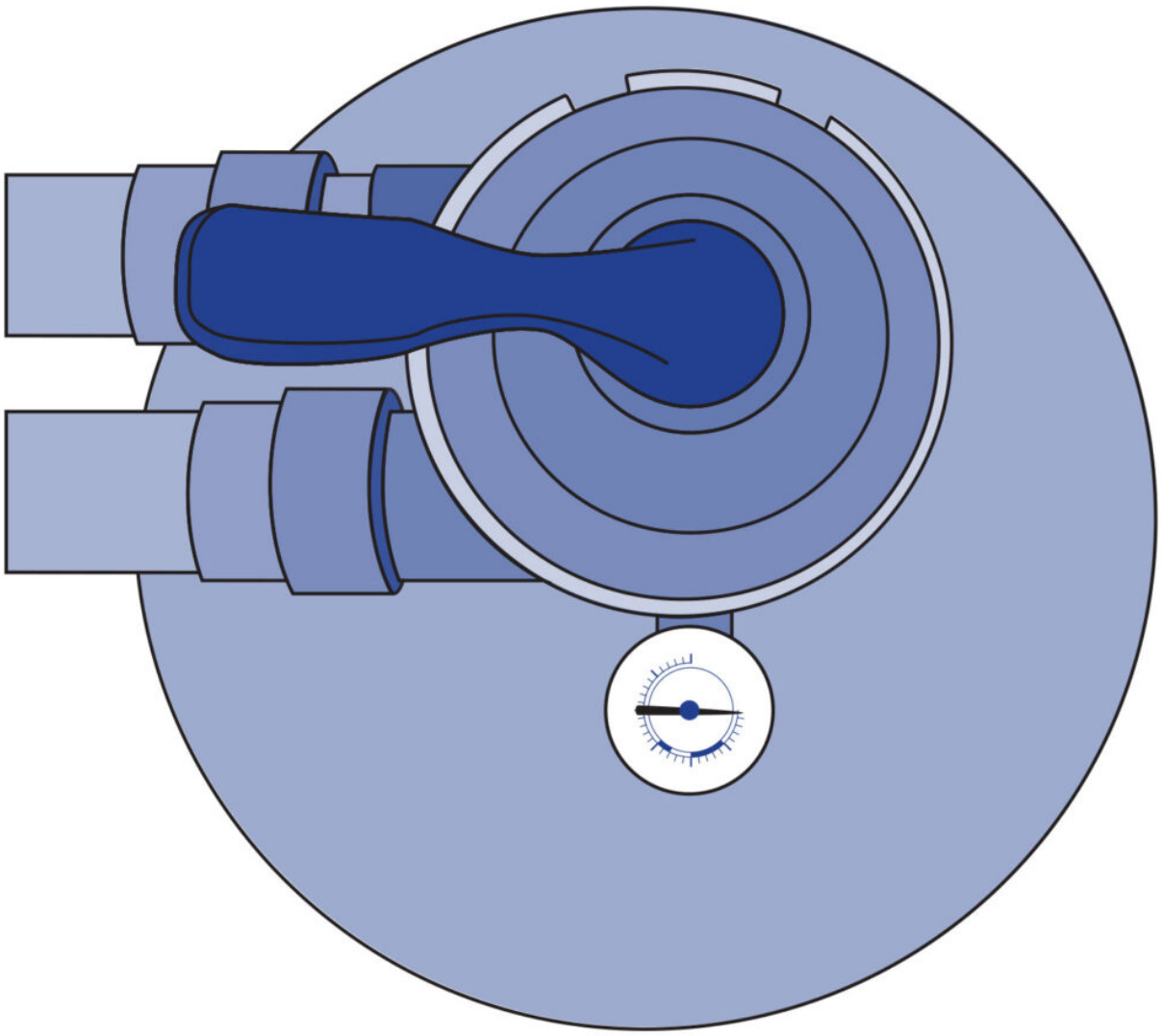

ATTENTION
No parts can be repaired by the user.
Do not try to repair this control box. Call your dealer or maintenance staff to request technical assistance. The installation should be carried out by an authorised electrician who should follow all the electrical connection instructions of this manual.
The selector is provided with a fuse to protect the filtering pump against overvoltage.
If a fuse blows, the button projects and a white band can be seen. It should be pressed to reset..

SWITCHING THE POWER SUPPLY OF THE EQUIPMENT ON/OFF

To connect the equipment to the power supply, it should be connected to the electrical supply, placing the differential switch in the ON position. To switch it off, place in the OFF position.

WATER FILTERING

Filtering is controlled automatically by the pre-programmed filtering cycles or when the system detects a reduction in temperature and activates the system to heat the water.

When the kit is operating normally, the Automatic-Manual Selector should always be in the

automatic position.

The Automatic–Manual Selector should always be in the automatic position when the kit is operating normally, otherwise the digital system will commit errors which could lead to significant damage of the equipment.

Put the selector valve in the FILTERING position to let the sand retain the particles while water is passing.

HOW TO EMPTY THE SPA

The compact equipment can empty the Spa. To do this, follow these steps:

- Open the valves of the circuits that by-pass water to the drain.
- Turn off the Filtering Pump by placing the selector in the OFF position.
- Place the selector valve in the EMPTYING position.
- Turn on the Filtering Pump by placing the selector in the Manual position.
- Once the Spa is empty, turn off the filtering pump by placing the selector in the OFF position and disconnect the equipment from the power supply.
- To refill the spa, place the valves in their normal position.

ATTENTION
When the water level in the Spa is insufficient for the pump to suck water, must shut the pump by turning the selector to the OFF position. If the pump works without water would suffer major damage. Emptying will drain through.

6.2. Systems

ATTENTION
-Do not try to repair parts. Call your vendor for technical support.
-Do not turn on the light when the spa is empty: The bulb will blow due to overheating.
-The spa has been designed for intermittent use only: do not use it more than two 15min sessions per day.
-Follow all of the instructions on electrical connections described in this manual.
-Only authorised electricians should install the spa.

Your spa is equipped with an electronic control system that will enable you to regulate the temperature of the water, choose the filter cycle that best suits your needs and activate the massage pumps and the blower pump. It will also enable you to turn on your spa lighting, change its colour and sequence. Depending on the design, your spa will have one of the following systems:

TP600

2 Speed pump

Heater

Spotlight

Circulation Pump

Massage Pumps

Turbo-Blower pump

Heater

Spotlight

Circulation Pump

2 Massage Pumps

Heater

Spotlight

AUX

2 Massage Pump

Pump

portlight (s)

Massage Pump

Sportlight (s)

Touch Panel

6.3. System control and configuration

CONTROL SYSTEM FOR TP600

Fill the spa to its correct operating level. Be sure to open all valves and jets in the plumbing system before filling to allow as much air as possible to escape from the plumbing and the control system during the filling process.

After turning the power on at the main power panel, the top-side panel display will go through

specific sequences. These sequences are normal and display a variety of information regarding the configuration of the hot tub control.

PRIMING MODE - M019 | TP600

This mode will last for 4-5 minutes or you can manually exit the priming mode after the pump(s) have primed.

Regardless of whether the priming mode ends automatically or you manually exit the priming mode, the system will automatically return to normal heating and filtering at the end of the priming mode. During the priming mode, the heater is disabled to allow the priming process to be completed without the possibility of energizing the heater under low-flow or no-flow conditions. Nothing comes on automatically, but the pump(s) can be energized by pushing the “Jet” buttons.If the spa has a Circ Pump, it can be activated by pressing the “Light” button during Priming Mode.

You can manually exit Priming Mode by pressing a “Temp” button (Up or Down). Note that if you do not manually exit the priming mode as described above, the priming mode will be automatically terminated after 4-5 minutes. Be sure that the pump(s) have been primed by this time.

Once the system has exited Priming Mode, the top-side panel will momentarily display the set temperature but the displaywill not show the temperature yet, as shown below. This is because the system requires approximately 1 minute of water flowing through the heater to determine the water temperature and display it.

ADJUSTING THE SET TEMPERATURE | TP600

When using a panel with Up and Down buttons (Temperature buttons), pressing Up or Down will cause the temperature to flash. Pressing a temperature button again will adjust the set temperature in the direction indicated on the button. When the LCD stops flashing, the spa will heat to the new set temperature when required.

If a Temperature button is pressed and held when the temperature is flashing, the temperature will continue to change until the button is released.

MODE READY & REST / READY IN REST MODE | TP600

In order for the spa to heat, a pump needs to circulate water through the heater. The pump that performs this function is known as the “heater pump.” The heater pump can be either a 2-Speed Pump 1 or a circulation pump. READY Mode will circulate water every 1/2 hour, using Pump 1 Low, in order to maintain a constant water temperature, heat as needed, and refresh the temperature display. This is known as “polling.”

REST Mode will only allow heating during programmed filter cycles. Since polling does not occur, the temperature display may not show a current temperature until the heater pump has been running for a minute or two.

If the spa is configured for 24HR circulation, the heater pump generally runs continuously. Since the heater pump is always running, the spa will maintain set temperature and heat as needed in Ready Mode, without polling.

In Rest Mode, the spa will only heat to set temperature during programmed filter times, even though the water is being filtered constantly when in Circulation Mode.

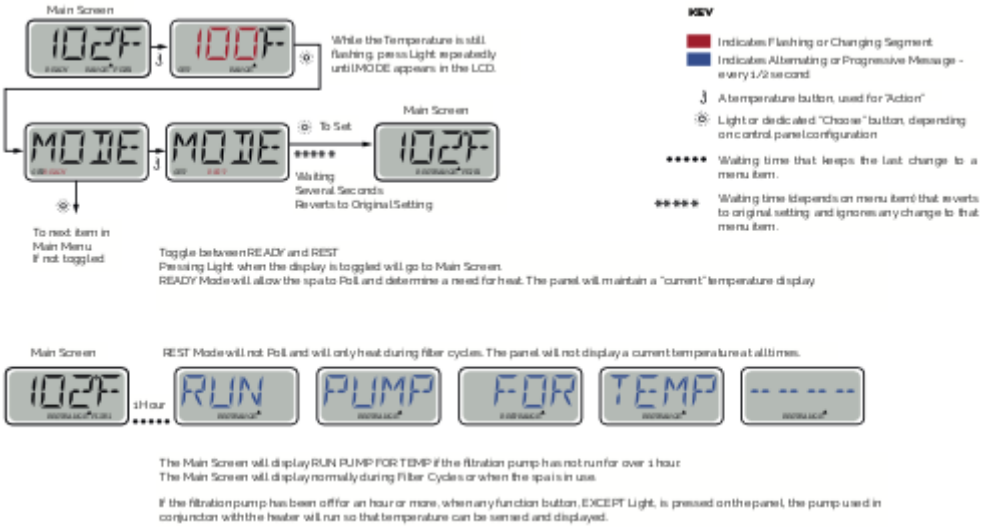

READY-IN-REST MODE | TP600

READY/REST appears in the display if the spa is in Rest Mode and Jet 1 is pressed. It is assumed that the spa is being used and will heat to set temperature. While Pump 1 High can be turned on and off, Pump 1 Low will run until set temperature is reached, or 1 hour has passed. After 1 hour, the System will revert to Rest Mode. This mode can also be reset by entering the Mode Menu and changing the Mode.

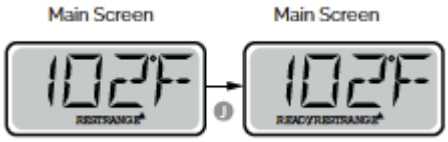

PRE-SET FILTER CYCLES | TP600

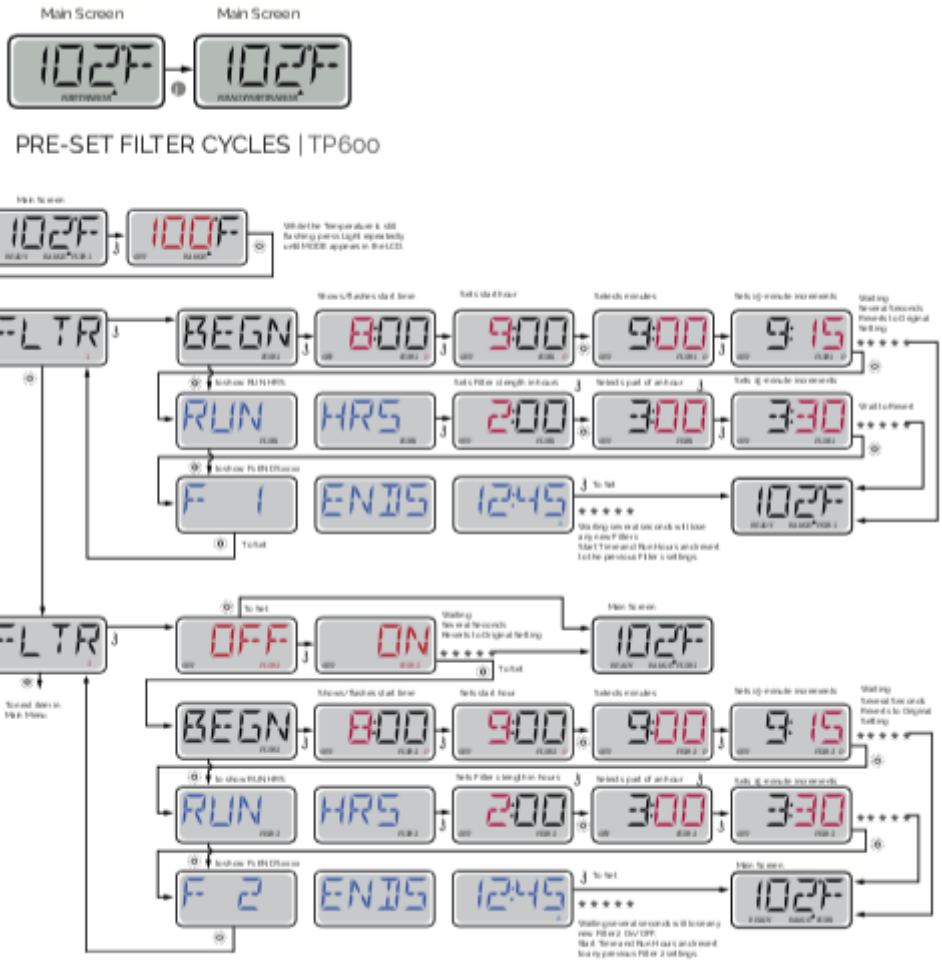

PURGE CYCLES | TP600

In order to maintain sanitary conditions, as well as protect against freezing, secondary water devices will purge water from their respective plumbing by running briefly at the beginning of each filter cycle. (Some systems will run a certain number of purge cycles per day, independent of the number of filter cycles per day. In this case, the purge cycles may not coincide with the start of the filter cycle.)

If the Filter Cycle 1 duration is set for 24 hours, enabling Filter Cycle 2 will initiate a purge when Filter Cycle 2 is programmed to begin.

MEANING OF FILTER CYCLES | TP600

1. The heating pump always runs during the filter cycle*

2. In Rest Mode, heating only occurs during the filter cycle

3. Purges happen at the start of each filter cycle

* For example, if your spa is set up for 24/hour circulation except for shutting off when the water temperature is 3?F/1.3?C above the set temperature, that shutoff does not occur during filter cycles.

CONTROL SYSTEM FOR Touch panel

Fill the spa to its correct operating level. Be sure to open all valves and jets in the plumbing system before filling to allow as much air as possible to escape from the plumbing and the control system during the filling process.

After turning the power on at the main power panel, the top-side panel will display a splash screen or startup screen.

MAIN SCREEN | TOUCH PANEL

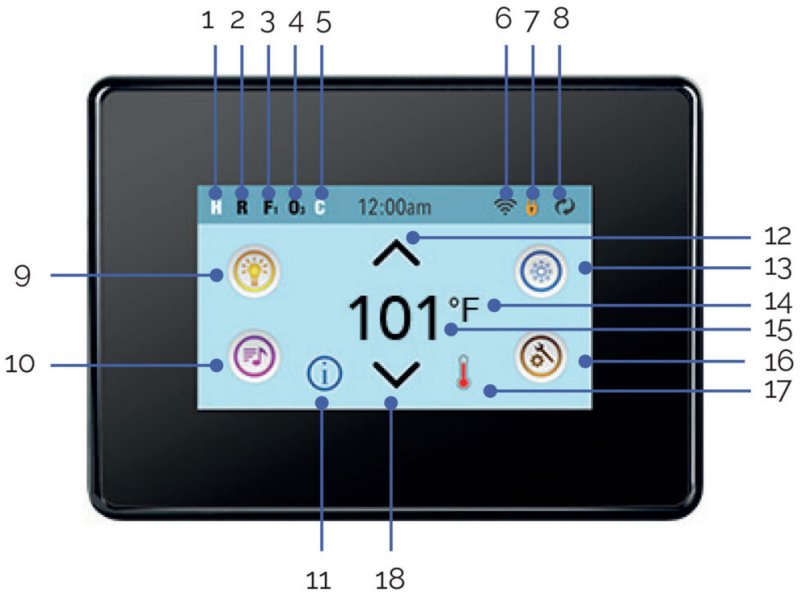

1. H = High Temperature Range. L = Low Temperature Range.

2. R = Ready Mode. RR= Ready And Rest Mode. |R= Rest Mode.

3. F1= Filter1 Mode. F2 = Filter2 Mode. F+ = Filter 1 and 2 Mode.

4. O3=Water Care (Ozone or UV, depending the system installed) is Running.

If you don't see the icon that means the Disinfection (Ozone or UV) is OFF

5. C= Cleanup Cycle is Running.

Note: Not all systems that can run a Cleanup Cycle display this icon.

6. - Wi-Fi icon just indicates that the Wi-Fi link is connected. It does not indicate signal strength.

Note: Not all systems that support Wi-Fi display this icon.

7. Lock Icon: When displayed, indicates the panel is in a locked mode. To unlock or lock a setting or panel lock, first press the corresponding icon on the Lock Screen then press the word "Lock" for 5+ seconds until the text and icon change to the opposite state.

There are 2 lock icons that can be shown on the title bar of most screens.

A tall skinny one representing a settings lock is applied. It is shown on screens that are affected by the settings lock. And the standard lock icon which represents the Panel being

locked. If both settings and panel are locked, only the panel lock will show since the settings lock doesn't do much in that situation. When the panel is locked, the Settings Screen will only show items not affected by that lock (System Info and Lock Screens).

8. Invert (or flip) Screen.

9. = Light is turned ON. = Light is Inactive. = Light is Disabled.

10. = Music is active = Music is inactive. = Music is disabled.

11. Message Waiting Indicator:

The Message Waiting Indicator will show one of the following icons:

= Fatal error (Spa can't function until it's fixed)

= Normal Error or Warning

= Reminder Message

= Information Message

Some messages will include the "Call for Service" text as it requires a service technician to fix the problem. If the panel is locked and a message alert appears, you will be taken to the UNLOCK screen before you can clear the message. Touching the Error/Warning/Reminder/Info Icon on the Message Screen will take you to the System Information Screen to allow for troubleshooting over the phone or for a field service tech to better understand what is going on. Exiting the System information Screen will take you back to the Message Screen in that situation.

12. Adjust set temperature higher.

13. =Spa Equipment Control Icon. Brings up a screen where the spa jets, blower or other equipment can be controlled. = Jet is Inactive. Indicates if a pump is running or not.

14. Indicates if the temperature is in ºF = Fahrenheit or ºC = Celsius.

15. Current water temperature.

16. Setting Icon. = Settings is Active. = Settings is Inactive (when a Lock is applied). Takes you to Settings Screen.

Where the available specific features that can be adjusted for the control can be adjusted. The same goes for the Utilities Screen and the Test Screen (used by Spa Technicians).

17. Indicates when the spa heater is on.

18. Adjust set temperature lower.

Note: After 30 minutes* the display will automatically go into sleep mode, which turns the display off. This is normal operation. Touch anywhere on the screen to wake the panel up.

SETTING SCREEN | TOUCH PANEL

The Settings Screen is where all programming and other spa behaviors are controlled. Each icon

on the Settings screen takes you to a different screen, where one or more setting may be viewed and/or edited.

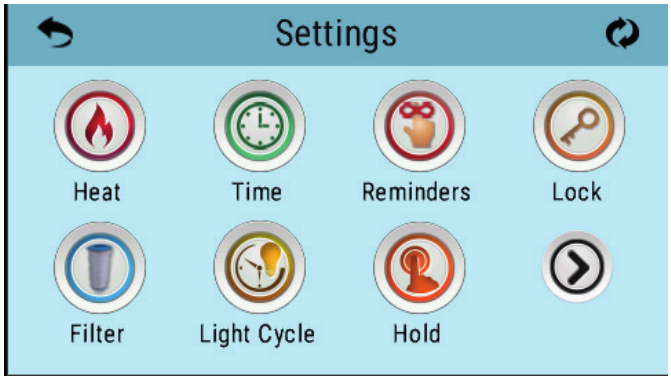

The Heat Icon takes you to a screen where you control the Heat Mode and the Temperature Range.

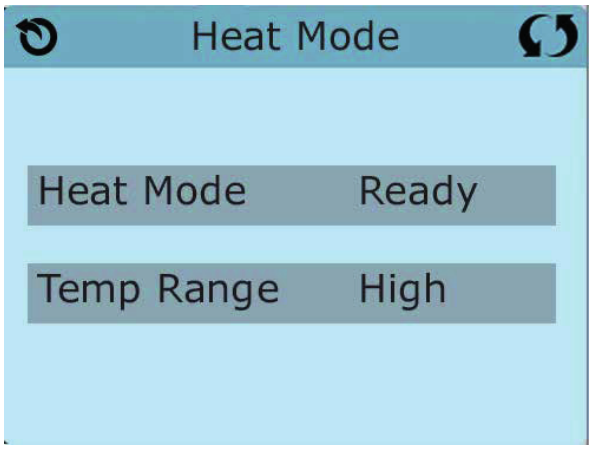

DUAL TEMPERATURE RANGES (High vs Low) | TOUCH PANEL

This system incorporates two temperature range settings with independent set temperatures. The specific range can be selected on the Settings screen and is visible on the Main Screen in the upper left corner of the display.
These ranges can be used for various reasons, with a common use being a “ready to use” setting vs. a “vacation” setting.

Each range maintains its own set temperature as programmed by the user. This way, when a range is chosen, the spa will heat to the set temperature associated with that range.

High Range can be set between 80°F and 104°F/ 27 ºC and 40 ºC.
Low Range can be set between 50°F and 99°F / 10 ºC and 37 ºC.

Freeze Protection is active in either range.

HEAT MODE - READY vs REST | TOUCH PANEL

In order for the spa to heat, a pump needs to circulate water through the heater. The pump that performs this function is known as the “heater pump”.

The heater pump can be either a 2-speed pump (Pump 1) or a circulation pump.

Rest Mode will only allow heating during programmed filter cycles. Since polling does not occur, the temperature display may not show a current temperature until the heater pump has been running for a minute or two.

CIRCULATION MODE | TOUCH PANEL

If the spa is configured for 24HR circulation, the heater pump generally runs continuously. Since the heater pump is always running, the spa will maintain set temperature and heat as needed in Ready Mode, without polling.

In Rest Mode, the spa will only heat to set temperature during programmed filter times, even though the water is being filtered constantly when in 24HR circulation mode.

READY-IN-REST MODE | TOUCH PANEL

Ready in Rest Mode appears in the display if the spa is in Rest Mode and the Jets 1 Button is pressed. After 1 hour, the System will revert to Rest Mode. This mode can also be reset by selecting the Heat Mode line on the Screen shown here.

FILTRATION | TOUCH PANEL

Main filtration

Using the same adjustment as Setting the Time, Filter Cycles are set using a start time and a duration. Each setting can be adjusted in 15-minute increments. The panel calculates the end time and displays it automatically.

The Filter Icon on the Settings Screen takes you to a screen where you control the Filter Cycles.

Filter cycle 2 - optional filtration

Filter Cycle 2 is OFF by default. Press “1” to view Filter 1. Press “2” once to view Filter 2. Press “2” again to turn Filter 2 ON or OFF. When Filter Cycle 2 is ON, it can be adjusted in the same manner as Filter Cycle 1. It is possible to overlap Filter Cycle 1 and Filter Cycle 2, which will shorten overall filtration by the overlap amount.

Purge cycles

In order to maintain sanitary conditions, as well as protect against freezing, secondary water devices will purge water from their respective plumbing by running briefly at the beginning of each filter cycle. (Some systems will run a certain number of purge cycles per day, independent of the number of filter cycles per day. In this case, the purge cycles may not coincide with the start of the filter cycle.)

If the Filter Cycle 1 duration is set for 24 hours, enabling Filter Cycle 2 will initiate a purge when Filter Cycle 2 is programmed to begin.

meaning of the filter cycles

1. The heating pump always runs during the filter cycle*.

2. In Rest Mode, heating only occurs during the filter cycle.

3. Purges happen at the start of each filter cycle.

* For example, if your spa is set up for 24/hour circulation except for shutting off when the water temperature is 3?F/1.3?C above the set temperature, that shutoff does not occur during filter cycles.

6.4. Jets operation

The water jets provide a hydrotherapy pressure jet. It is a closed circuit, where the water is absorbed by 1 or 2 pumps (depending on the SPA model) through the drain and driven to the jets.

The hydromassage effect is provided by the jet, when the circuit water mixes with the outside air, in the so-called Venturi effect.

To adjust the amount of air driven into the jets, simply turn the air input tab (venturis) as follows.

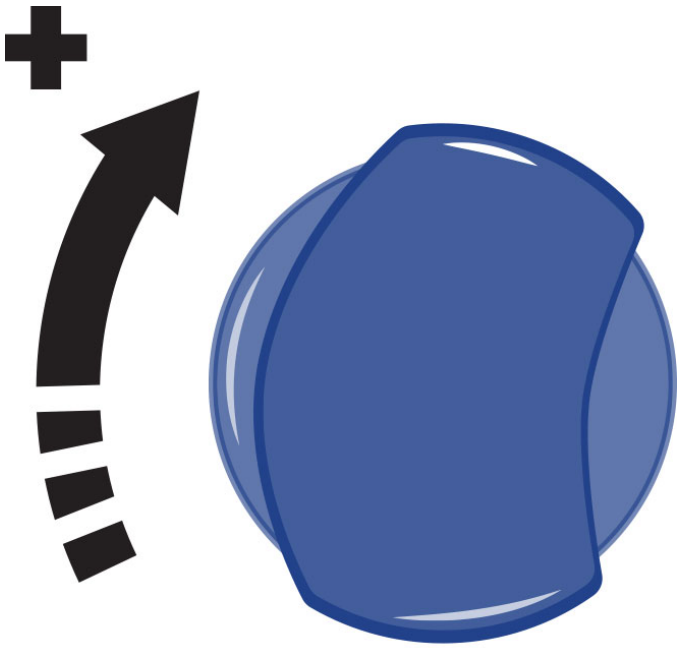

Each air inlet activates a certain group of jets.

Some jets can also adjust the flow intensity on opening and closing the water flow. To do this, proceed as follows:

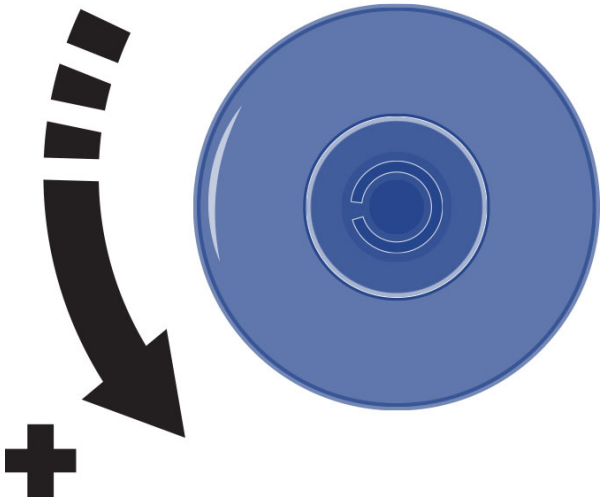

ATTENTION
Do not attempt to turn the outer ring of the jet, forcing it because you could damage it.

6.5. Swimspa control

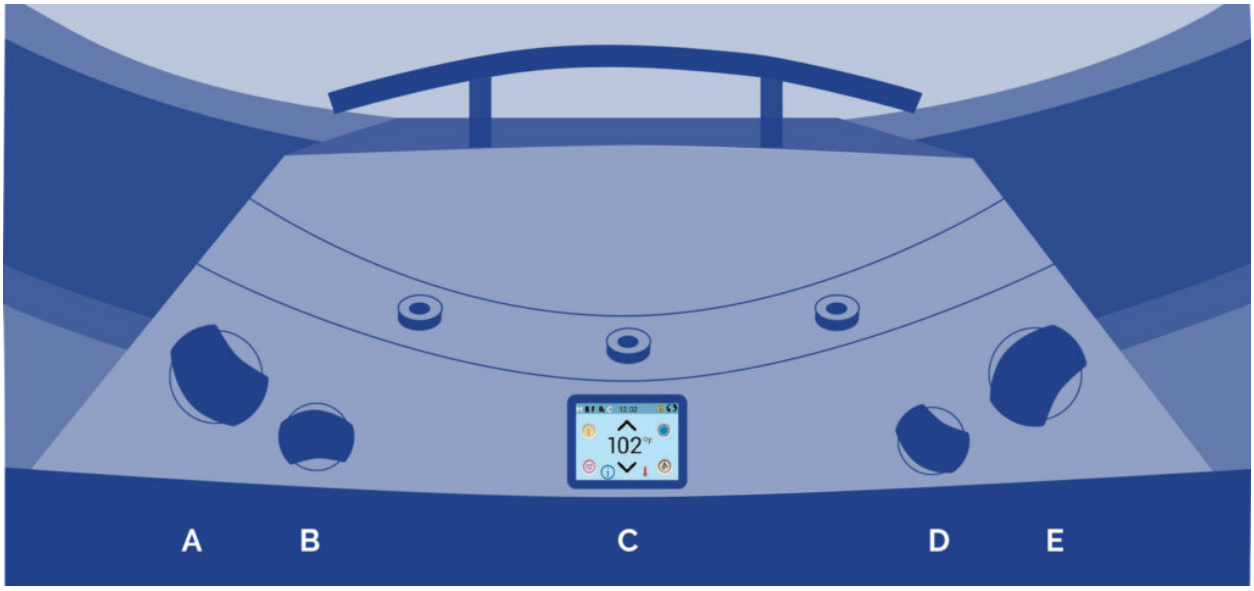

A - Jetstream control

With the jetstream control you can choose the power of the bottom jetstream and the massage.

B – Fountains control

Turning the fountains control you can regulate the flow of the three fountain jets. The fountain only runs when the filtration circuit is running or the spa is in heating process.

C – Main control panel

With the electronic main control panel you can turn on or turn off the Jets, Blower (optional) and Light, set the Temperature, the filtration cycles and Time.

D – Air control

With the air input valve you can adjust the air turbulence of the jetstream.

E – Jetstream control

With the jetstream control you can choose the power of the top jetstream and the massage.

7. Maintenance

The Spas are built with maximum quality and with the hardest wearing materials available. Proper care and maintenance will ensure a long life-span of the Spa and its components.

7.1. Maintenance warnings

- Before carrying out any electrical or mechanical maintenance work, make sure that the machine is disconnected from the mains, and that the start-up devices are blocked.
- Do not handle the equipment with wet feet.
- Before carrying out any work on the Spa, it should be switched off from the electrical supply (differential in the OFF position, or disconnect the mains cable).
- Remember that this equipment can not be connected to a normal plug.
- This equipment requires suitable electrical installation. This should be performed by a qualified person following the electrical safety standards of each country.
- The electrical supply of the Spa should always be protected by a highly sensitive differential. A 30 mA differential is recommended.
- Earth connection is essential. The earthing circuit of the building should always be in perfect condition to guarantee the safety of the Spa user. If you have any doubts on this, ensure that the earth circuit is checked by a qualified person. The manufacturer is not responsible for possible damage caused by unsuitable maintenance of the earth circuit.
- Do not connect the electrical equipment (differential in the ON position), if the Spa is empty of water.
- Use a cable of a section suitable to the power of the Spa and the distance to the panel.
- Always observe the instructions included in Safety Warnings chapter of this manual.
- Never try to access an electrical component unless you are qualified or are the Head of Maintenance.
- Never handle electrical elements with wet feet.
- Means must be incorporated to disconnect the spa from the electrical network as part of the fixed installation, according to the current regulations.

7.2. Filter washing

When “lowflow” errors are indicated or when the pressure indicated by the filter pressure gauge exceeds 1 bar, the filter should be washed.

Follow these steps to do it:

1. Outside the filtering cycle, with the filtering pump off, place the selector valve in the WASHING position. If there is a valve between the filter and the drain in the installation, it should be open.

2. Start-up the filtering pump, by placing the selector in the Manual position for not more than 1 minute.

3. Turn off the pump by placing the selector once again in the OFF position.

4. Place the selector valve in the RINSING position and start-up the filtering pump for 30 seconds.

5. Place the selector valve in the FILTERING position.

6. Turn on the filtering pump and check that the pressure and errors do not persist. If they do, repeat the procedure.

ATTENTION
While the filter is being washed, dirty water is emptied through the drain reducing the water level of the Spa. Once washing has been completed, check the level and fill the Spa if necessary. The Spa will not work properly if there is insufficient water, and may even cause a breakdown.
During the filter washing process, messages may appear on the control panel display, such as HL or LF. These do not affect the operation as long as washing and rinsing times are not exceeded, The equipment will become seriously damaged if washing lasts longer than the set time.

7.3. Pre-filter of the pump cleaning

It is recommended to periodically check the condition of the pre-filter of the pump to avoid it from blocking. If debris has accumulated, the pre-filter should be opened and cleaned.

Follow these steps to clean the pre-filter:

1. Turn off the Filtering Pump by placing the selector in the OFF position.

2. Close the valve of the filtering circuit that connects the pump to the Spa.

3. Using the key supplied with the equipment, turn the upper cover of the pre-filter anticlockwise until

it becomes loose. Remove the basket of the pre-filter to clean it.

4. Put the basket back into place. Place the joint of the cover to close it using the key.

5. Open the filtering circuit valve.

7.4. Maintenance in periods of non-use or absence

Read the following advices to take care of your spa when you are not using it or you are absent.

SHORT PERIODS (3-5 days)

- Adjust the pH and treat the water (see Water Maintenance section)
- Cover the spa.
- Before using the Spa again, readjust the pH and treat the water again.

PROLONGED PERIODS (5-14 days)

- Set the temperature at its lowest level.

- Adjust the pH and treat the water (see Water Maintenance section).
- Cover the Spa.
- Before using the Spa again, reset the temperature as required, readjust the pH and treat the water again.

PREPARTING FOR THE WINTER PERIOD

If it is not planned to use the Spa through the winter season or for prolonged periods of time, the following operations should be done:

- Disconnect the electrical equipment, placing the differential switch tab in the OFF position.
- Locate the drain valve (see Drainage of the Spa) and turn the red lever of the valve to the OPEN position. The Spa will empty by gravity through the general drain.
- Leave the drain valve open.
- Remove the filter cartridge/s from the filter (See Maintenance of the filter) and keep in a dry place.
- Clean and dry the Spa.
- Cover the Spa.

Do not leave water in the Spa without electrical connection at temperatures below 0ºC, as the pipes can freeze and damage the spa.

ATTENTION
Remember that when you drain your spa not all of the water runs off. If your spa is not going to be used for long periods, especially in winter, remove any stagnant water on the seats and on the bottom of the spa with a sponge. Any water remaining in the pipes can be sucked out through the water and air nozzles using a liquid suction pump. The pumps must also be emptied through the drain plug.

7.5. Anti-freeze protection

If the temperature sensors detect a drop in temperature to below 6.7ºC, the heating element and filter pump will connect automatically to prevent the water from freezing and the damage this could cause the Spa.

The equipment will remain connected for 4 minutes after the temperature reaches 7.2ºC.

In colder climates, an additional temperature sensor can be added as a precaution and to avoid freezing conditions not detected by the standard sensor.

If the pump turns off in this situation, empty the Spa and contact your authorised dealer or Technical Assistance Service.

8. Error messages

Message	Meaning	Action required
Water Temperature is Unknown		After the pump has been running for 1 minute, the temperature will be displayed.

Possible freezing condition	A potential freeze condition has been detected, or the Aux Freeze Switch has closed.	All water devices are activated. In some cases, pumps may turn on and off and the heater may operate during Freeze Protection. This is an operational message, not an error indication.
The water is too hot – M029	The system has detected a spa water temp of 110°F (43.3°C) or more, and spa functions are disabled	System will auto reset when the spa water temp is below 108°F (42.2°C). Check for extended pump operation or high ambient temp.
The water level is too low	This message can only appear on a system that uses a water level sensor. It appears whenever the water level get too low (or the water level sensor is disconnected)	Automatically disappears when the water level is adequate. Pumps and the heater turn OFF when this message appears.
The water flow is low – M016	There may not be enough water flow through the heater to carry the heat away from the heating element.	Heater start up will begin again after about 1 min. See: **.
The water flow has failed – M017	There is not enough water flow through the heater to carry the heat away from the heating element and the heater has been disabled.	See: **.
The heater may be dry – M028	Possible dry heater, or not enough water in the heater to start it. The spa is shut down for 15 min.	See: **.
The heater is dry – M027	There is not enough water in the heater to start it. The spa is shut down.	After the problem has been resolved, you must reset the message to restart heater start up. See: **.
The heater is too hot – M030	One of the water temp sensors has detected 118°f (47.8°C) in the heater and the spa is shut down.	You must reset the message when water is below 108°f (42.2°C). See: **.
Flow-Related Checks		Check for low water level, suction flow restrictions, closed valves, trapped air, too many closed jets and pump prime.

Sensors are out of sync – M015	The temperature sensors MAY be out of sync by 3°F.	Call for Service if this message does not disappear within a few minutes.
Sensors are out of sync -- Call for service -- M026	The temperature sensors are out of sync.	The fault above has been established for at least an hour. Call for service. See **
Sensor A Fault, Senor B Fault – Sensor A: M031, Sensor B: M032	A temperature sensor or sensor circuit has failed.	If the problem persists, contact your vendor or a service engineer. See: **.
Comunications error	The control panel is not receiving communication from the System.	If the problem persists, contact your vendor or a service engineer.
Test software installed	The Control System is operating with test software.	If the problem persists, contact your vendor or a service engineer.
Program memory failure – M022	At Power-Up, the system has failed the Program Checksum Test.	This indicates a problem with the firmware (operation program) and requires a service call. See: **.
The settings have been reset (Persistent Memory Error) – M021		Contact your service organization if this message appears on more than one power-up. See: **.
The clock has failed – M020		If the problem persists, contact your vendor or a service engineer. See: **.
Configuration error (Spa will not Start Up)		If the problem persists, contact your vendor or a service engineer.
A pump may be stuck on – M034	Water may be overheated.	POWER DOWN THE SPA. DO NOT ENTER THE WATER. Contact your dealer or service organization.
Hot fault – M035	A Pump Appears to have been Stuck ON when spa was last powered POWER DOWN THE SPA.	DO NOT ENTER THE WATER. If the problem persists, contact your vendor or a service engineer.

** Some messages can be reset from the panel. Messages that can be reset will appear with a Clear Icon at the bottom of the Message Screen. Press the Clear Icon text to reset the message.

9. Evidence of conformity

iberspa

IBERSPA, S.L.
Pol. Ind
Av. Pla d'Urgell 2-8
25200 - Cervera, Lleida
(Spain)

ES	**PRODUCTOS:**	**DA**	**PRODUKTER:**
EN	**PRODUCTS:**	**S**	**PRODUKTER:**
DE	**PRODUKTE:**	**FI**	**TOUTTEET:**
FR	**PRODUITS:**	**N**	**PRODUKTER:**
IT	**PRODOTTI:**	**GR**	**ΠΡΙΟΝΤΑ:**
PT	**PRODUTOS:**	**PL**	**PRODUCTY:**
NL	**PRODUKTEN:**		
RU	**продукт:**		

PRIVATE SPAS
PRIVATE COMPACT KITS

ES - DECLARACION DE CONFORMIDAD
Los productos arriba mencionados se hallan conformes a : Directiva 2014/30/UE (Compatibilidad Electromagnética), Directiva 2014/35/UE (Baja Tensión) y la Norma Europea EN 17125:2018, EN 60335-1:2012+AC+A11, EN 60335-2 -60 :2005+A1+A11+A12+A2

EN - EVIDENCE OF CONFORMITY
The products listed above are in compliance with : 2014/30/EU (Electromagnetic Compatibility), Directive 2014/35/EU (Low Voltage) and with the European Standard EN 17125:2018, EN 60335-1:2012+AC+A11 , EN 60335-2 -60 :2005+A1+A11+A12+A2

DE - KONFORMITÄTSERKLÄRUNG
Die oben angeführten Produkte entsprechen den, Sicherheitsebestimmungen der Richtlinien der Elektromagnetischen Verträglich 2014/30/EU , der Niederspannungs Richtlinien 2014/35/EU, un der europäischen Vorrschrift EN 17125:2018, EN 60335-1:2012+AC+A11, EN 60335-2 -60 :2005+A1+A11+A12+A2

FR - DECLARATION CONFORMITÉ
Les produits mentionnés ci-dessus sont conformes aux : Directive Compatibilité Electromagnétique 2014/30/UE , Directive Basse Tension 2014/35/UE et à la Norme Européenne EN 17125:2018, EN 60335-1:2012+AC+A11 , EN 60335-2 -60 :2005+A1+A11+A12+A2

IT - DICHIARAZIONE DI CONFOMITÀ
I prodotti su elencati sono conformi alle seguenti : Directtiva 2014/30/UE (Compatibilita elettromagnetica), Directtiva 2014/35/UE (Bassa Tensione) e alla Norma Europea EN 17125:2018, EN 60335-1:2012+AC+A11 , EN 60335-2 -60 :2005+A1+A11+A12+A2

PT - DECLARAÇÃO DE CONFORMIDADE
Os produtos acima mencionado estão conforme a : Directiva 2014/30/UE (Compatibilidade Electromagnética), Directiva 2014/35/UE (Baixa tensão) e a Norma Europeia EN 17125:2018, EN 60335-1:2012+AC+A11 , EN 60335-2 -60 :2005+A1+A11+A12+A2

NL - CONFOMITEITSVERKLARING
Bovenstaande produkten voldoen aan de veiligheidsvoorschriften van de,Richtlijn Electromagnetische compatibiliteit 2014/30/EU , laagspannings richtlijn 2014/35/EU en aan de Europese norm EN 17125:2018, EN 60335-1:2012+AC+A11 , EN 60335-2 -60 :2005+A1+A11+A12+A2

RU - ДЕКЛАРАЦИЯ СООТВЕТСТВИЯ
Упомянутые выше модели соответствуют: Директиве 2014/30 / ЕС (об электромагнитной совместимости), Директиве 2014/35 / ЕС (о низком напряжении) и Европейском стандарте: EN 17125:2018, EN 60335-1:2012+AC+A11 , EN 60335-2 -60 :2005+A1+A11+A12+A2

DA - FÖRSÄKRAM OM ÖVERENSSTÄMMELSE
Ovans ende produkter à i överenstämmelse med : Direktiv 2014/30/EU (Elektromagnestik kompatibilitet), Direktiv 2014/35/EU (L gspänning) och med Europeisk Standard EN 17125:2018, EN 60335-1:2012+AC+A11 , EN 60335-2 -60 :2005+A1+A11+A12+A2

S - OVERENSSTEMMELESESERKL RING
Ovenst ende produkter oppfyller betingelsene elektromagnetiskdirektiv 2014/30/EU , lavpenningsdirektiv 2014/35/EU, og Europeisk Standard EN 17125:2018, EN 60335-1:2012+AC+A11 , EN 60335-2 -60 :2005+A1+A11+A12+A2

FI - OVERENSSTEMMELSESERK RING
De ovenn vnte varer er i overensstemmelse med : Direktiv-2014/30/EU (Elektromagnetisk forenelighed), Direktiv- 2014/35/EU (Lavsp nding) og i overensstemmelse med den europ iske standard EN 17125:2018, EN 60335-1:2012+AC+A11 , EN 60335-2 -60 :2005+A1+A11+A12+A2

N - VAKUUTUS YHDENMUKAISUUDESTA
Yllämainiut tuotteet ovat yhdenmukaisia direktiivin 2014/30/EU (Elektromagneettinen yhdenmuskaisuus), direktiivin 2014/35/EU (Matalajännite)sekä eurooppalaisen standarin EN 17125:2018, EN 60335-1:2012+AC+A11 , EN 60335-2 -60 :2005 +A1+A11+A12+A2

GR - ΑΗΑΩΣΗ ΣΥΜΒΑΤΟΤΗΤΑΣ
Τα παραπα΄νω προτόντα είναυ συμφωνα με την Οδηγία 2014/30/ΕΕ , (Ηλεκτρομαγνηυκηζ Συμβατστηταζ) την Οδηγία 2014/35/ΕΕ (Χαμηληζ Τασηζ) κου ε τον Ευρωπατκό Κανονισμ
EN 17125:2018, EN 60335-1:2012+AC+A11 ,
EN 60335-2 -60:2005+A1+A11+A12+A2

PL - DEKLARACJA ZGODNOŚCI
Wymienione powyżej produkty są zgodne z: Dyrektywą 2014/30/UE (Kompatybilność Elektromagnetyczna), Dyrektywa 2014/35/UE (Niskie Napięcie) oraz Norma Europejska: EN 17125:2018, EN 60335-1:2012+AC+A11 , EN 60335-2 -60 :2005+A1+A11+A12+A2

Firma/Cargo:
Signature/Qualification:
Unterschrift/Qualifizierung:
Signature/Qualification:
Firma/Qualifica:
Assinatura/Título:
Handtekening/Hoedanigheld:
подпись / квалификация:

Namnteckning/Befattning:
Underskrft / Stilling:
Signatur/Tilstand:
Allekirjoitus/Virka-asema:
Υπραφη/Θεση:
Podpisu/Stanowisko:

Gerente de Iberspa, S.L. P.P
Manager of Iberspa, S.L. by proxy

© Iberspa, 2024