Operation installation and instructions spa privat

English

Contenido

Quick start guide

1. Introduction

2. General warnings

3. Installation and assembly
   - 3.1. Warnings
   - 3.2. Position and location of the spa
   - 3.3. Drainage
   - 3.4. Filling the spa
   - 3.5. Electrical connections

4. Start-up
   - 4.1. System start-up
   - 4.2. Water treatment

5. Operating instructions
   - 5.1. Warnings on the use of the spa
   - 5.2. Systems
   - 5.3. System Control and Configuration
   - 5.3.1 Control system for TP500-TP500S
   - 5.3.2. Control system for TP600
   - 5.3.3. Control system for Touch Panel
   - 5.4. Jets operation
   - 5.5. Swimspa controls
   - 5.6. Renewing the spa water
   - 5.7. Extras

6. Maintenance
   - 6.1. Warnings
   - 6.2. Water maintenance
   - 6.3. Filter maintenance
   - 6.4. Pre-filter of the pump maintenance
   - 6.5. Acrylic maintenance
   - 6.6. Light maintenance
   - 6.7. Maintenance in periods of non-use or absence

7. Error codes

8. TROUBLESHOOTING

9. Recycling and environment

10. Evidence of conformity

Quick start guide

1.

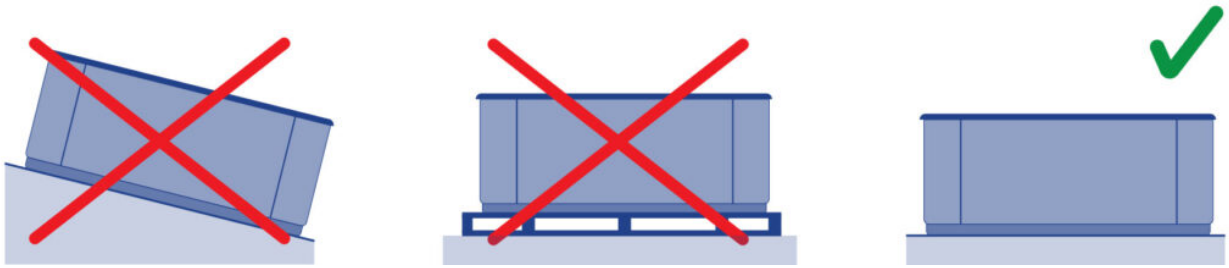

2.

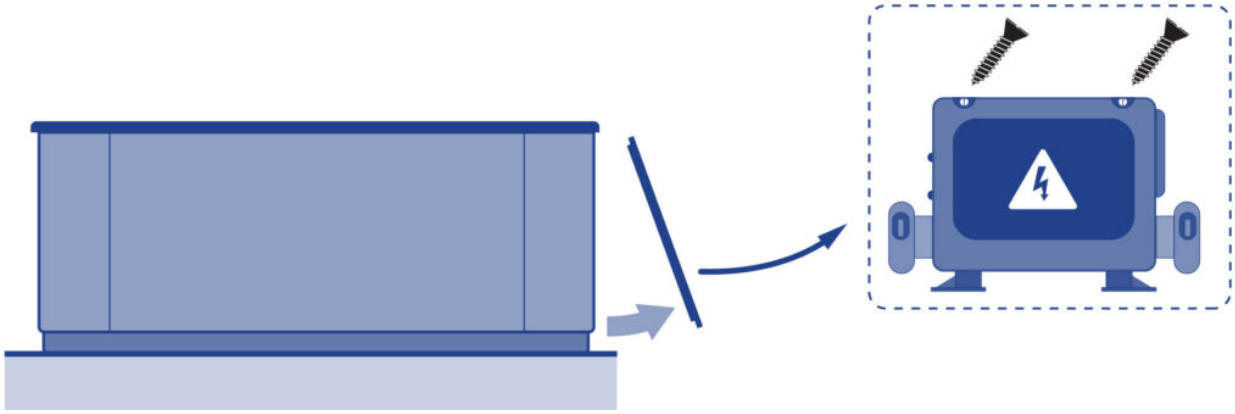

3.

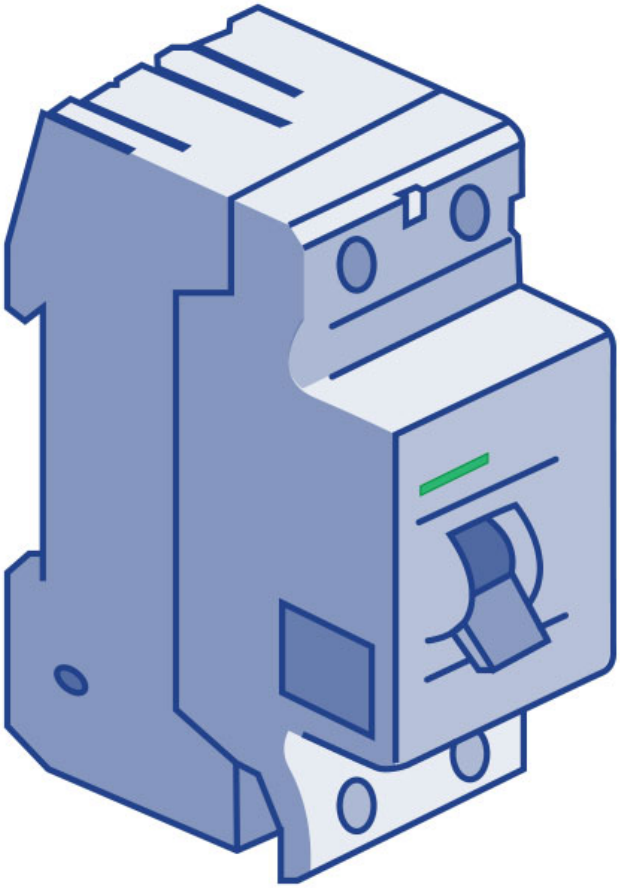

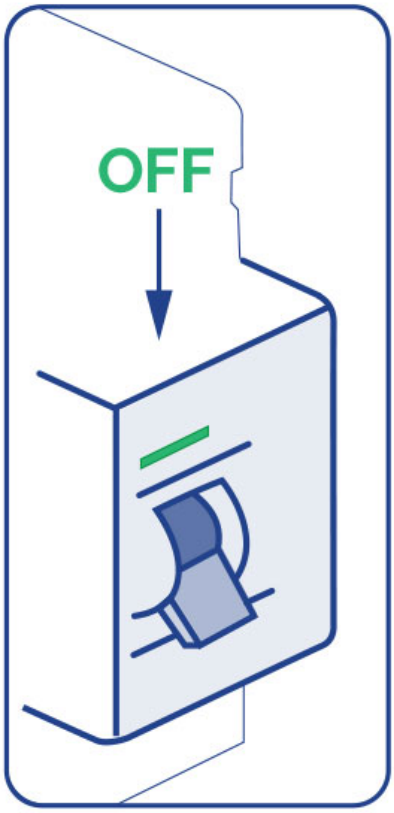

4.

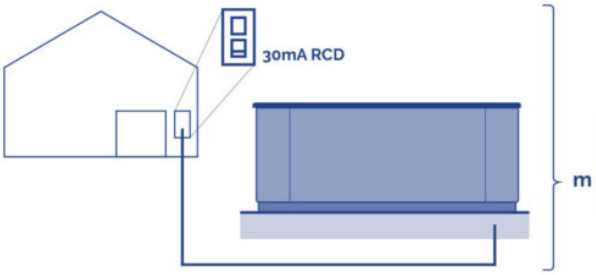

KW

	KW required										
	2.1	2.5	2.8	3.2	3.5	**4.4**	5.3	6.2	7.0	7.9	8.8
Distance	**Nominal section of the cable in mm²**										
6 - 11 m	2.5	2.5	2.5	2.5	4	**4**	6	10	10	10	10
11 - 15 m	**2.5**	**2.5**	**4**	**4**	**4**	**6**	**6**	**10**	**10**	**10**	**10**
15 - 20 m	4	4	4	6	6	**6**	10	10	10	16	16

5.

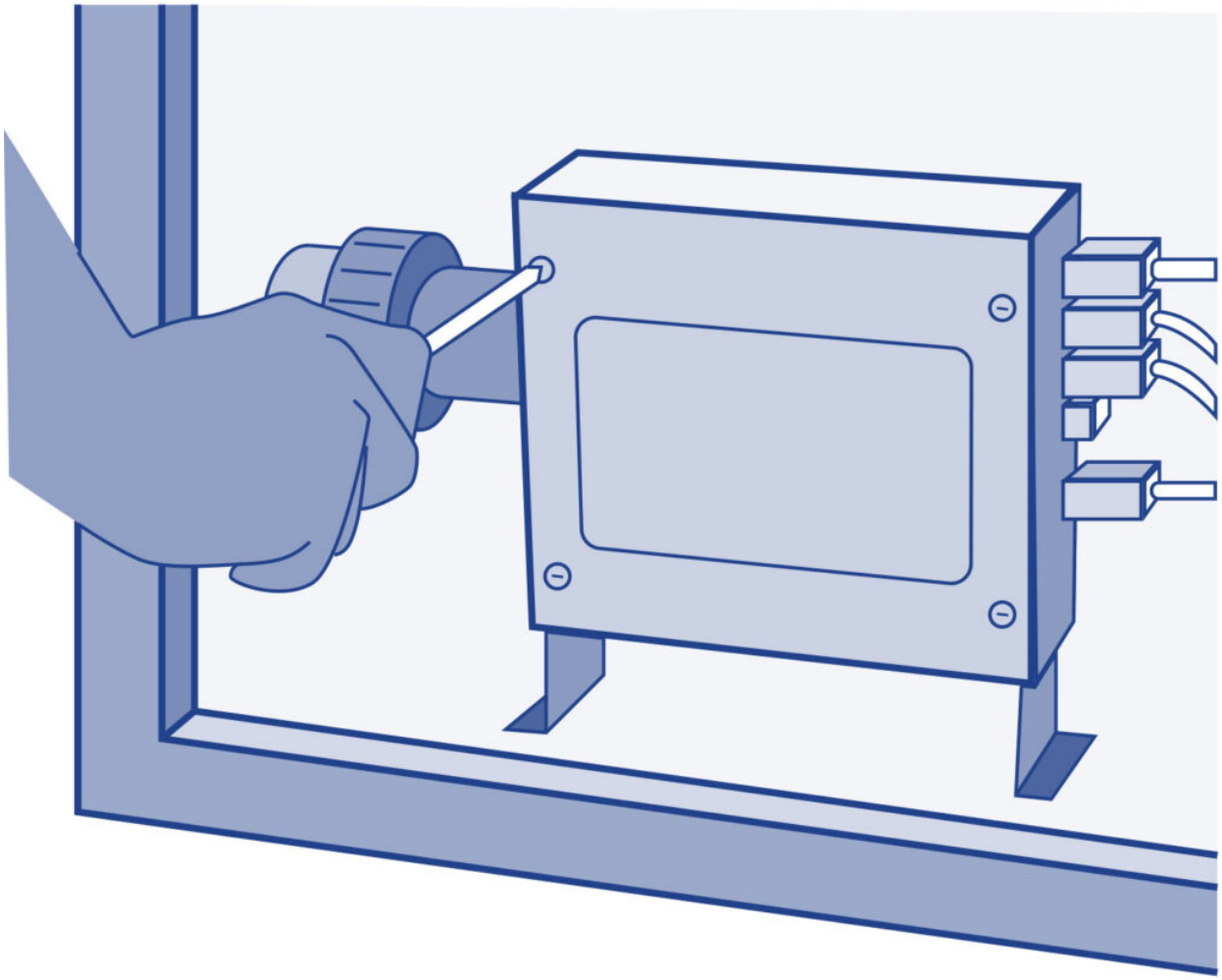

6.

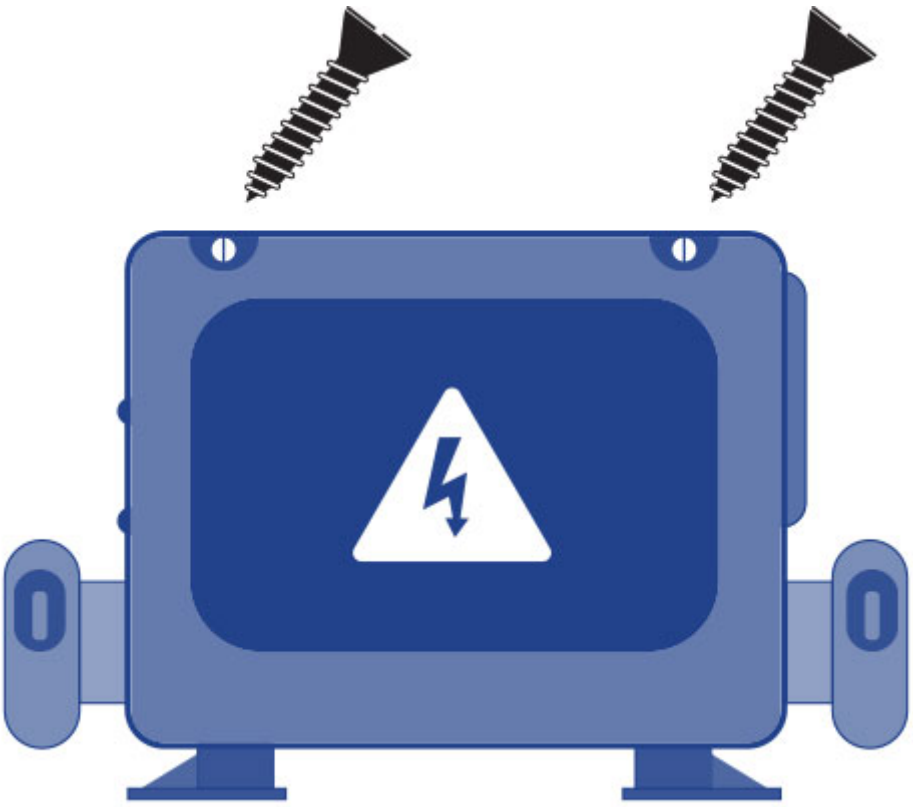

6a - Single phase
6b & 6c - Three phase

6a.

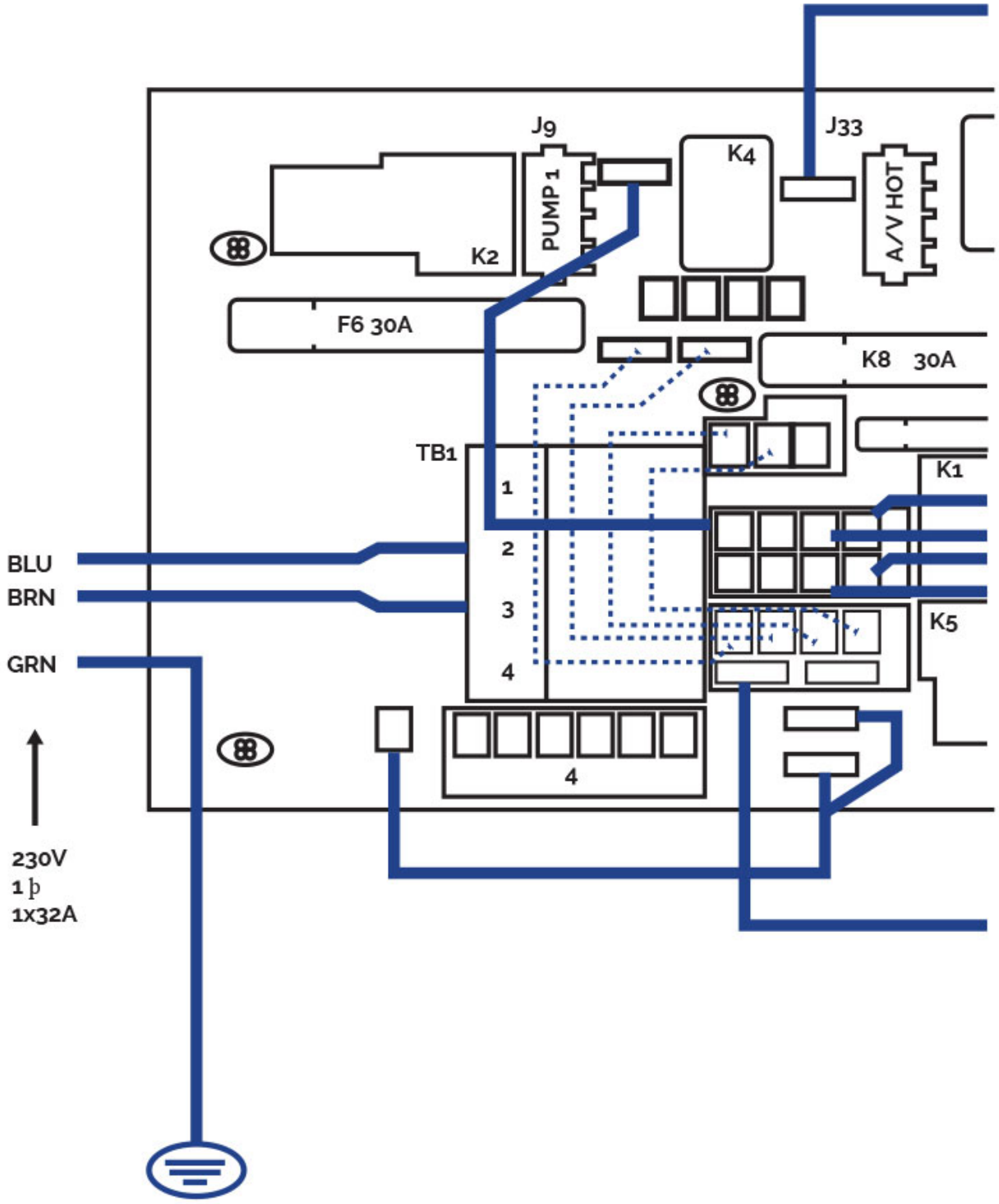

Single line 230V 32A

6b

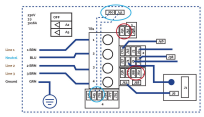

Three-phase line 380V III
BP21G1WL

Remove bridges;
J51-J88 and J52-J62
Changes this bridges
J60-J36 -> TO J60-J45
J41-J12 -> TO J41-J79
Power requirements:

3 Services 5 wires: Line 2, Line2, Line 3, Neutral, Ground 400VCA, 50/60Hz 3 phase, 16A (Circuit breaker rating = 20A max each phase line).

6c.

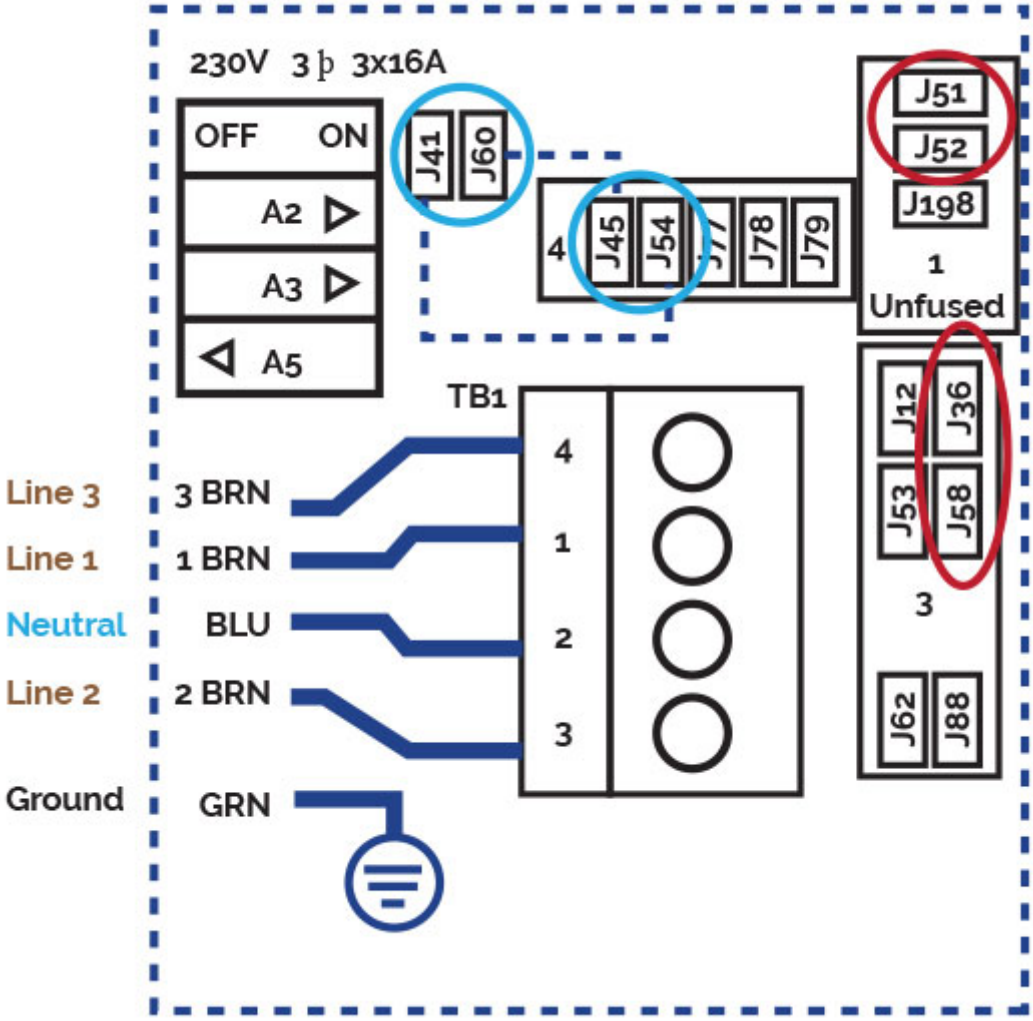
230V 3 þ 3x16A
OFF
ON
A2
A3
A5
J41
J60
4
J45
J54
J78
J79
J51
J52
J198
1
Unfused
TB1
4
1
2
3
Line 3
3 BRN
Line 1
1 BRN
Neutral
BLU
Line 2
2 BRN
Ground
GRN
J12
J36
J53
J58
3
J62
J88

Three-phase line 400V BP6013G1 & BP6013G2

Remove jumpers:
disconnect J51 and J58
disconnect J52 and J36
Changes this bridges:
J41 -J53 -> TO J41 - J54
J60-J12 -> TO J60-J45
Put DIP switches A5 on OFF and A2, A3 on ON position.
Power requirements:

3- Service 5 wires: Line 2, Line 2, Line 3, Neutral, Ground 400VCA, 50/60 Hz* 3 phase, 16A (Circuit breaker rating = 20A max each phase line). *BP systems automatically detect 50Hz vs 60Hz

7.

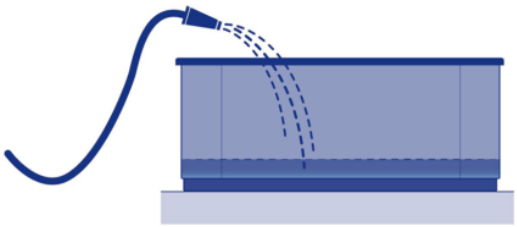

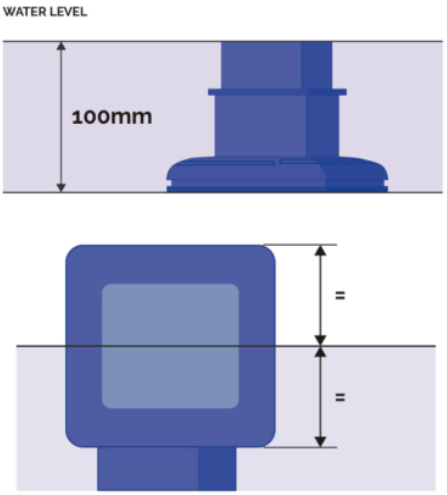

8.

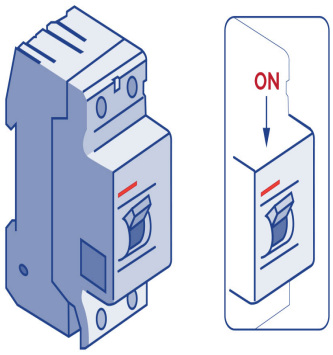

9.

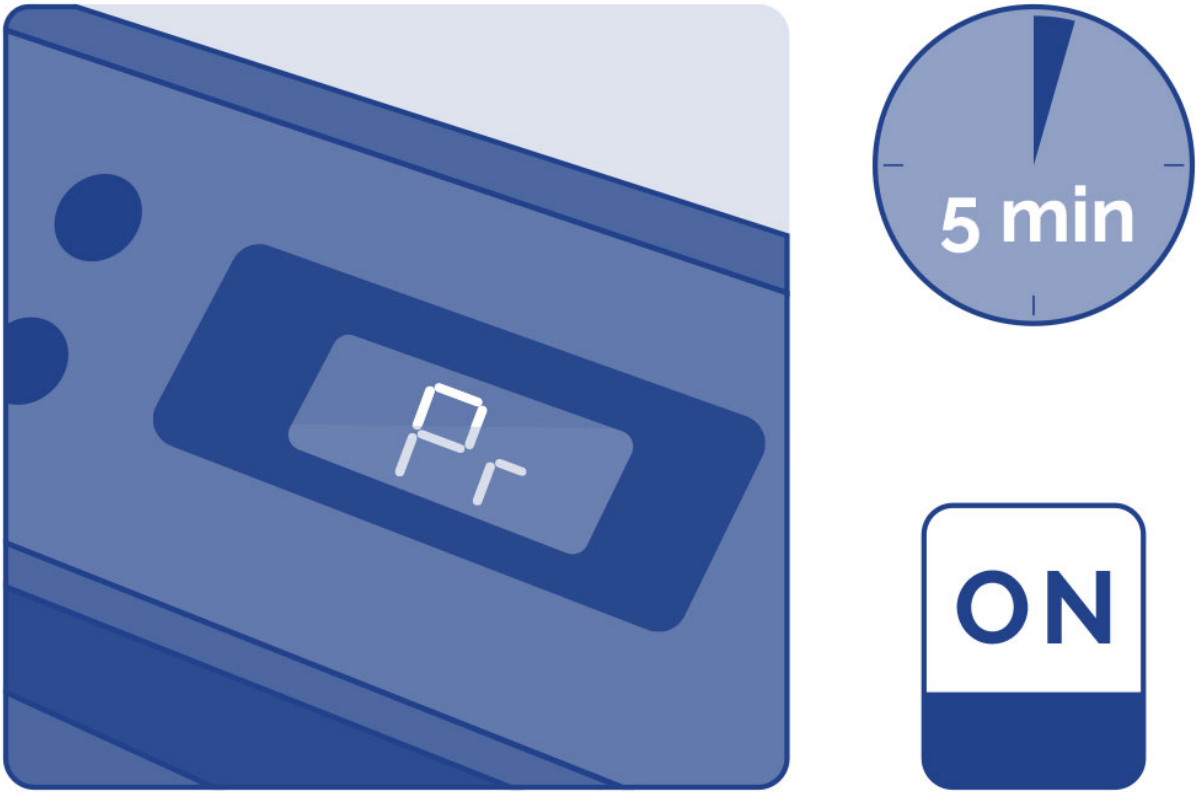

10.

11.

SPA SYSTEM CONFIGURATION
https://www.youtube.com/watch?v=EvKx_CkS_tw

12.

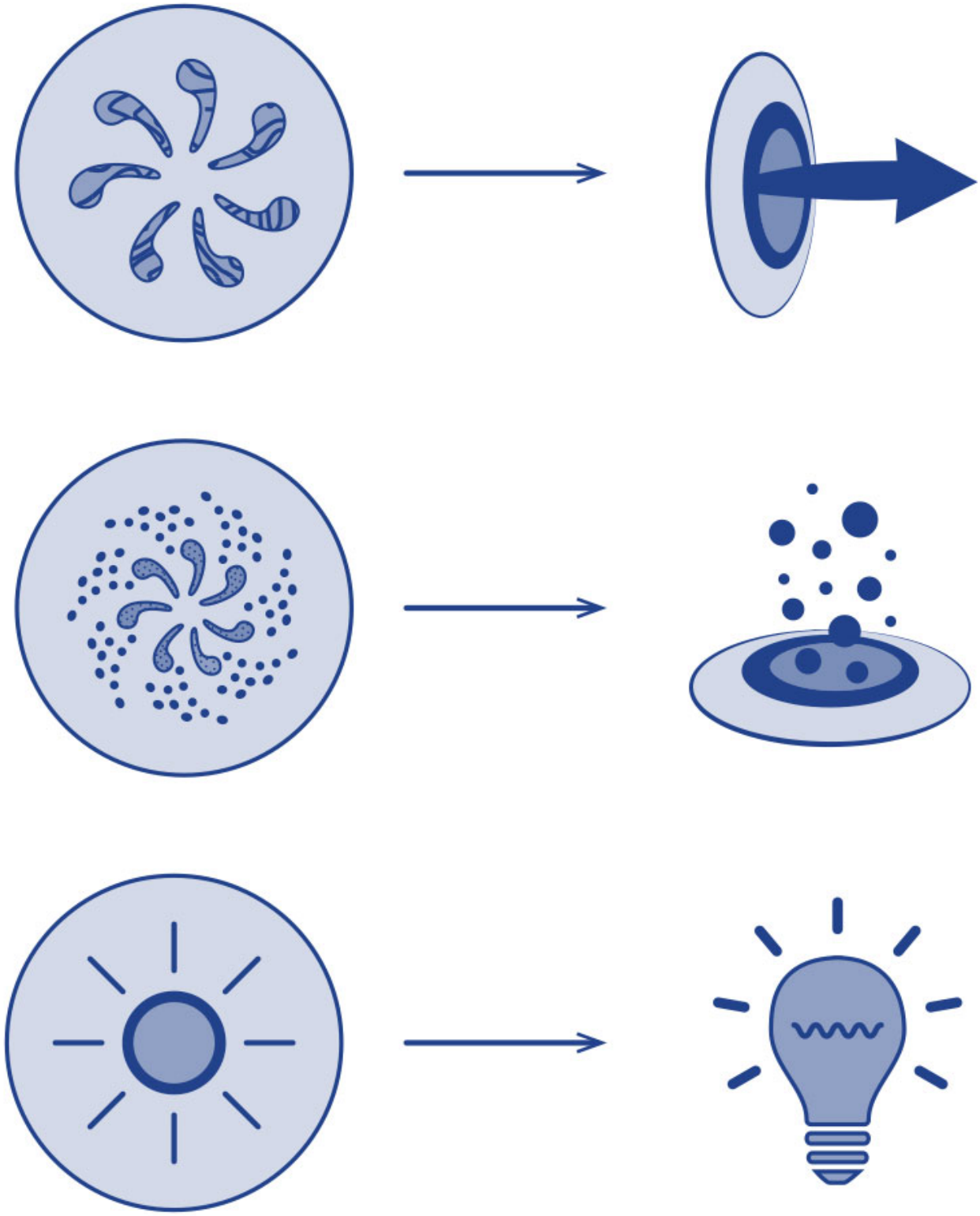

13.

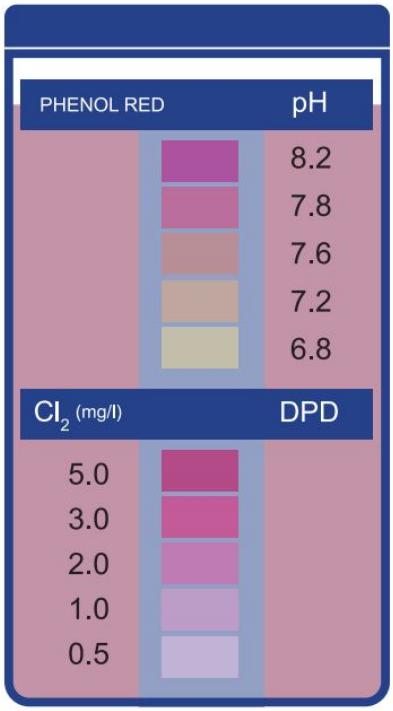

pH: 7,2 - 7,6

Cl_2: 1-1,5 PPM

1. Introduction

This manual contains all the information needed to fully enjoy your SPA. We recommend that you take some time to go over the points detailed below.

If you have any question or doubt on the operation or maintenance of this product, please contact your fitter or local dealer. They are specialists and their professional knowledge will help you to enjoy this product.

IMPORTANT: The manufacturer reserves the right to change the design or specifications without prior notice and without entering into any obligation.

This Spa has been designed and conceived for private use only: any public use shall annul its guarantee.

2. General warnings

Carefully follow current regulations regarding accident prevention and respect regulations in each country.

• Any modification on the equipment requires prior authorisation from the manufacturer. Original spare parts and accessories authorised by the manufacturer guarantee greater safety. The manufacturer of the equipment is exempt from all liability for damages caused by using non-authorised spare parts or accessories.

• The manufacturer shall not be responsible for the damages caused by the assembly of non-authorized accessories, nor for those caused by a improper handling by non-qualified personnel. Please contact your authorised dealer or technical assistance service if you have any doubts or need technical assistance.

• The equipment should be installed in a place which has been properly prepared and where all components of the Spa can be easily accessed. The guarantee does not cover work needed to be carried out to install or replace the product. (See the Guarantee).

• The user shall ensure th at qualified adult professionals carry out both the assembly and maintenance works, who have previously carefully read the installation and service instructions.

• Contact the Technical Service of the manufacturer or your local dealer in the event of malfunction or a breakdown.

• The installation of the Spa must at all times meet current regulations applicable in each country, particularly those referring to electrical safety.

• This unit must be installed in an appropriately prepared area with easy access to all the components of the Spa. The Guarantee does not cover any building work required to position or replace the product. (See the Guarantee).

• The floor has to be capable of supporting the expected load.

• During operation, some parts of the equipment are at dangerous electrical voltage levels. Work on each element or equipment can only be performed once it has been disconnected from the mains and with the start-up devices disconnected.

• Safety in the operation of the machine can only be guaranteed if installation and service instructions are followed.

• There is a risk of flooding with this equipment and therefore, the Spa should be installed in an area prepared to collect or drain leaking water (either from below or overflowing water) as a result of using the Spa or from possible leakage in any of its circuits. (See the Guarantee).

• Carefully follow current regulations regarding accident prevention.

• This appliance can be used by children aged from 8 years and above and persons with reduced physical, sensory or mental capabilities or lack of experience and knowledge if they have been given supervision or instruction concerning use of the appliance in a safe way and understand the hazards involved.

• Children shall not play with the appliance.

• Cleaning and user maintenance shall not be made by children without supervision.

• The limits indicated on the electrical control panel cannot be exceeded under any circumstances.

• Avoid contact with electrical voltage.

• The appliance should be supplied through a residual current device (RCD) with a rated tripping current not exceeding 30 mA

• In case you use a cover that does not have fastening and/or safety elements for preventing unsupervised access to your spa, it is recommended that you install an alternative element (e.g., access control system, fence, etc.) to prevent the unauthorised access to and use of your spa.

3. Installation and assembly

3.1. Warnings

• During the electrical conexion with the equipment have special care in the layout of the cables in the bypass box, make sure no pieces of cables are in the box after closing and that the ground conexion is correctly done.

• Pay special care that no water enters in conctact neither with the pumps neither with the electrical parts under tension.

3.2. Position and location of the spa

Before installing and assembling the Spa, ensure that the packaging of the Spa is in perfect condition. Contact your distributor immediately if the packaging is damaged.

Position the Spa horizontally, placing the whole base of the unit on a smooth, flat and level surface, capable of supporting the weight when used (full of water, plus the weight of the bathers).

The Spa cannot be placed on a curved surface or on blocks.

The side where the motors are located should be fully accessible. In order to carry out maintenance tasks, the location of the Spa should enable it to be moved so that all its sides can be easily accessed.

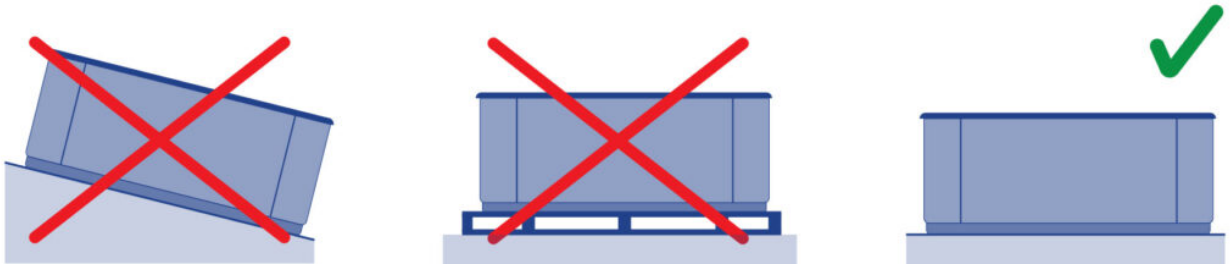

OUTDOOR INSTALLATION

If an outdoor location is chosen to place the Spa:

Do not expose the Spa to sunlight when it is empty and without a protection cover. Remember that prolonged exposure to sunlight may damage the surface of the Spa and its accessories. Acrylic rapidly absorbs heat from the sunrays reaching very high temperatures which will damage the Spa. Maximum absorption temperature is 60ºC.

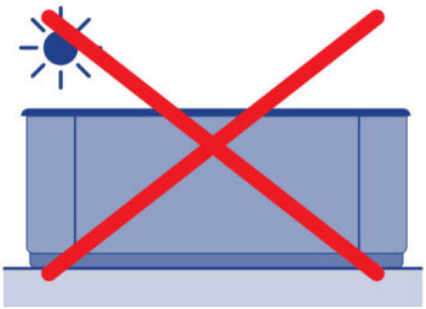

It is recommended to place the Spa away from trees, as falling leaves may block the filter.

If the Spa is placed inside glass structures, prevent sunrays shining directly on the Spa through the glass, as the temperature could be excessively hot.

INDOOR INSTALLATION

It is recommended to ensure drainage in the area of the Spa, to prevent water from accumulating around it and to avoid dangerous access areas for bathers.

Remember that the operation of the Spa causes increased damp and therefore, there must be a ventilation system to prevent damp from accumulating which could cause damage in the room where the Spa is located.

The use of a cover reduces heat loss and damp in the room.

ATTENTION
The spa should not be left empty and uncovered at room temperatures over 20ºC or below 4ºC.

PORTABLE LEVELLING SPAS

Some spas come with an adjustable metal structure to facilitate their installation. This structure has several points of support. Before filling the spa, these points of support should be adjusted to ensure they are all in contact with the ground.

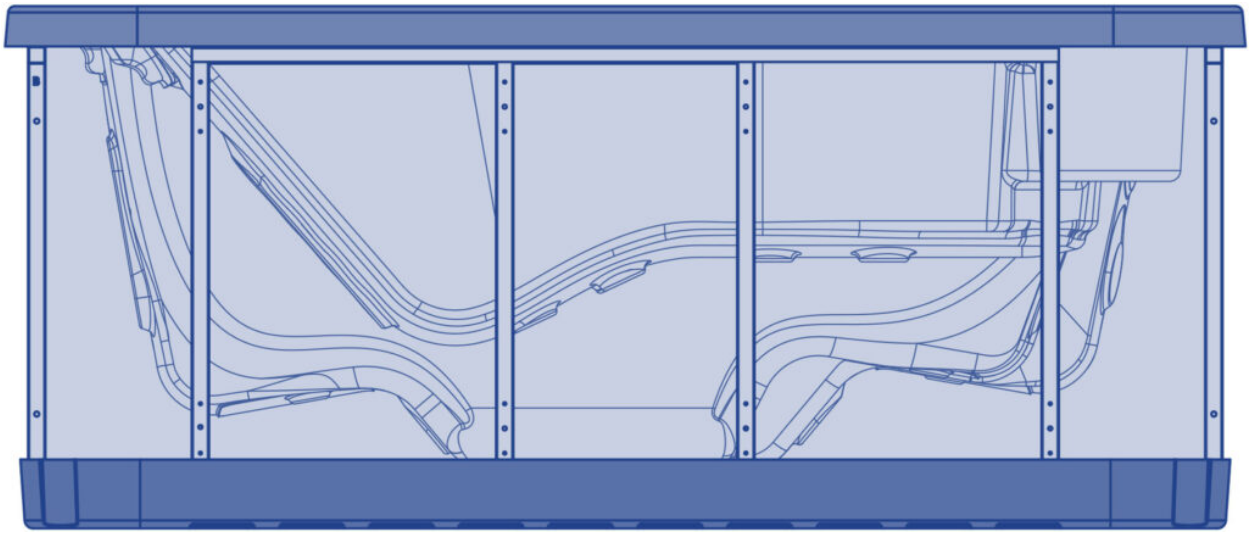

SWIMSPA

TRANSPORT

A1. SWIMSPA - CONTAINER DOWNLOAD

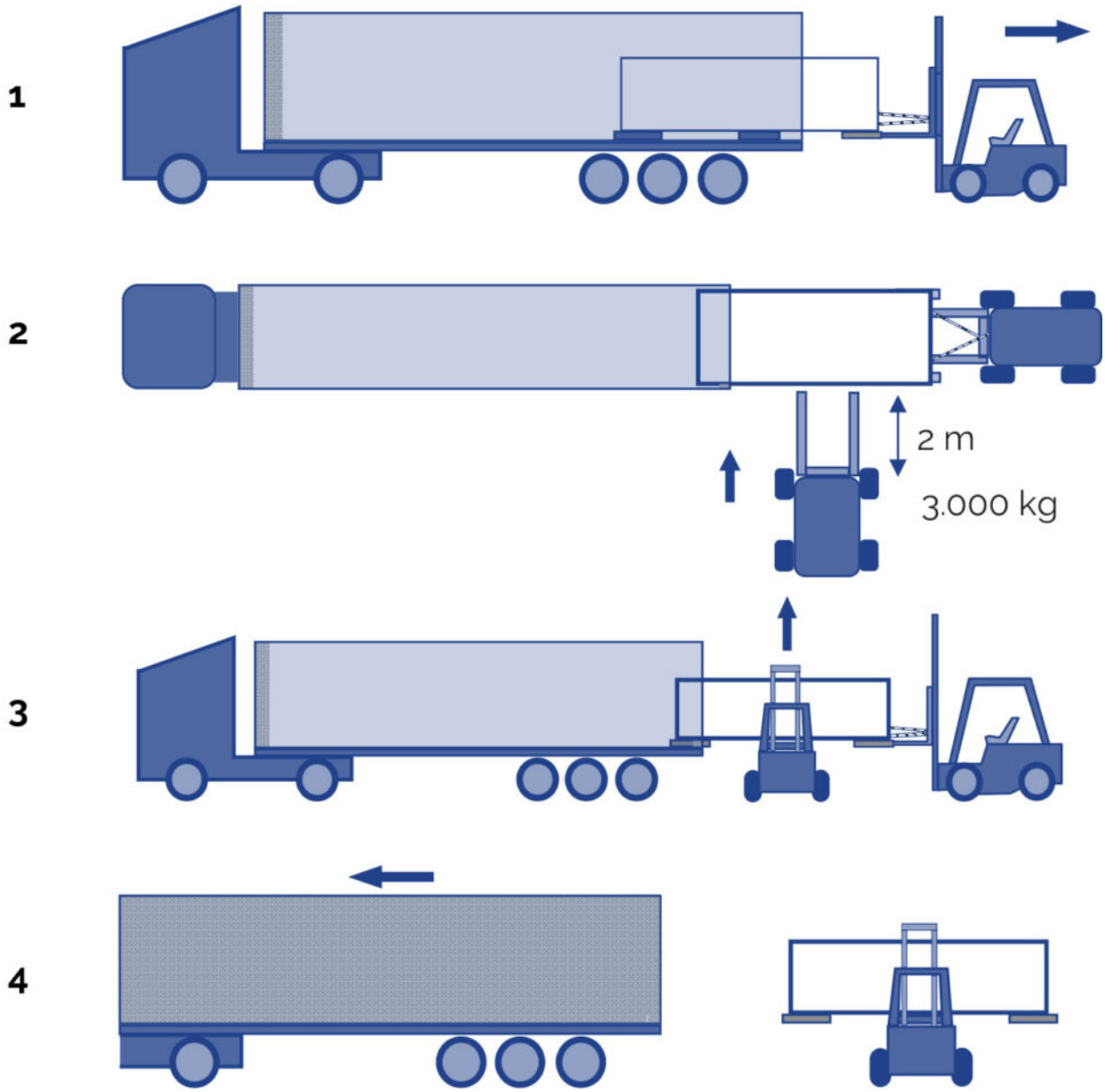

A2. SWIMSPA - CONTAINER DOWNLOAD

1

2

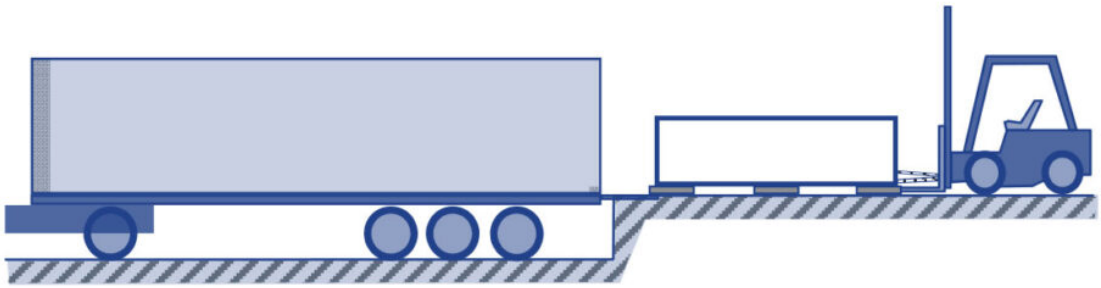

3

A3. SWIMSPA - TRUCK DOWNLOAD

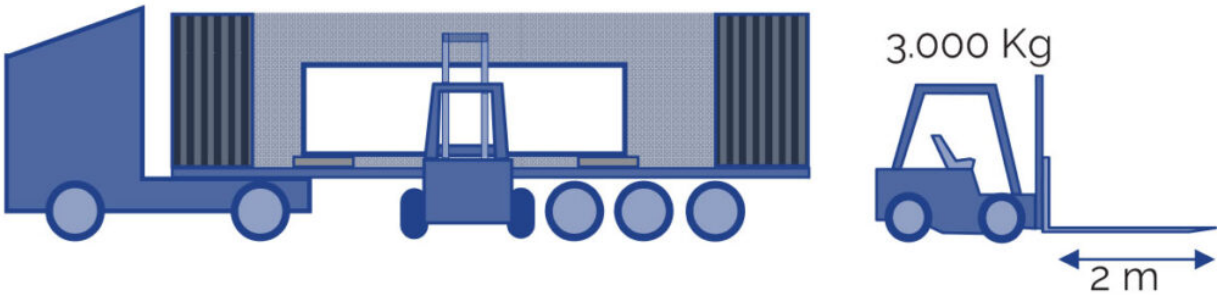

INSTALLATION

B. SWIMSPA - INSTALLATION

Dimensions & Weight:
See Technical Doc.

1

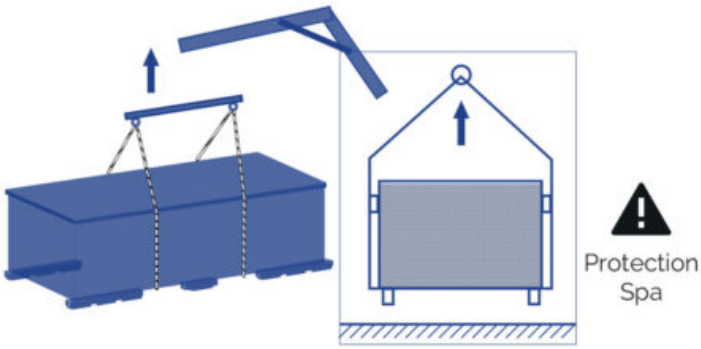

2

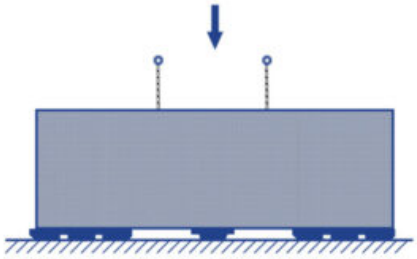

3

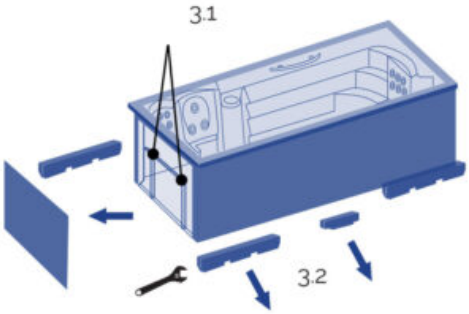

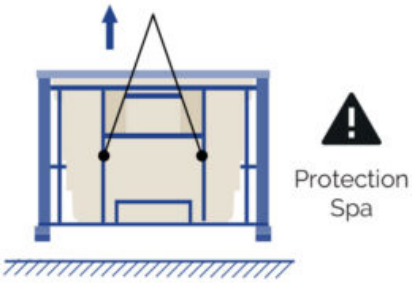

4

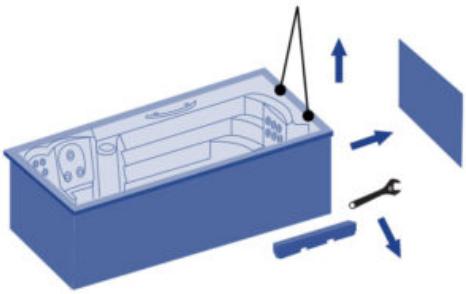

5

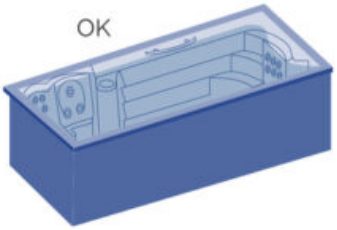

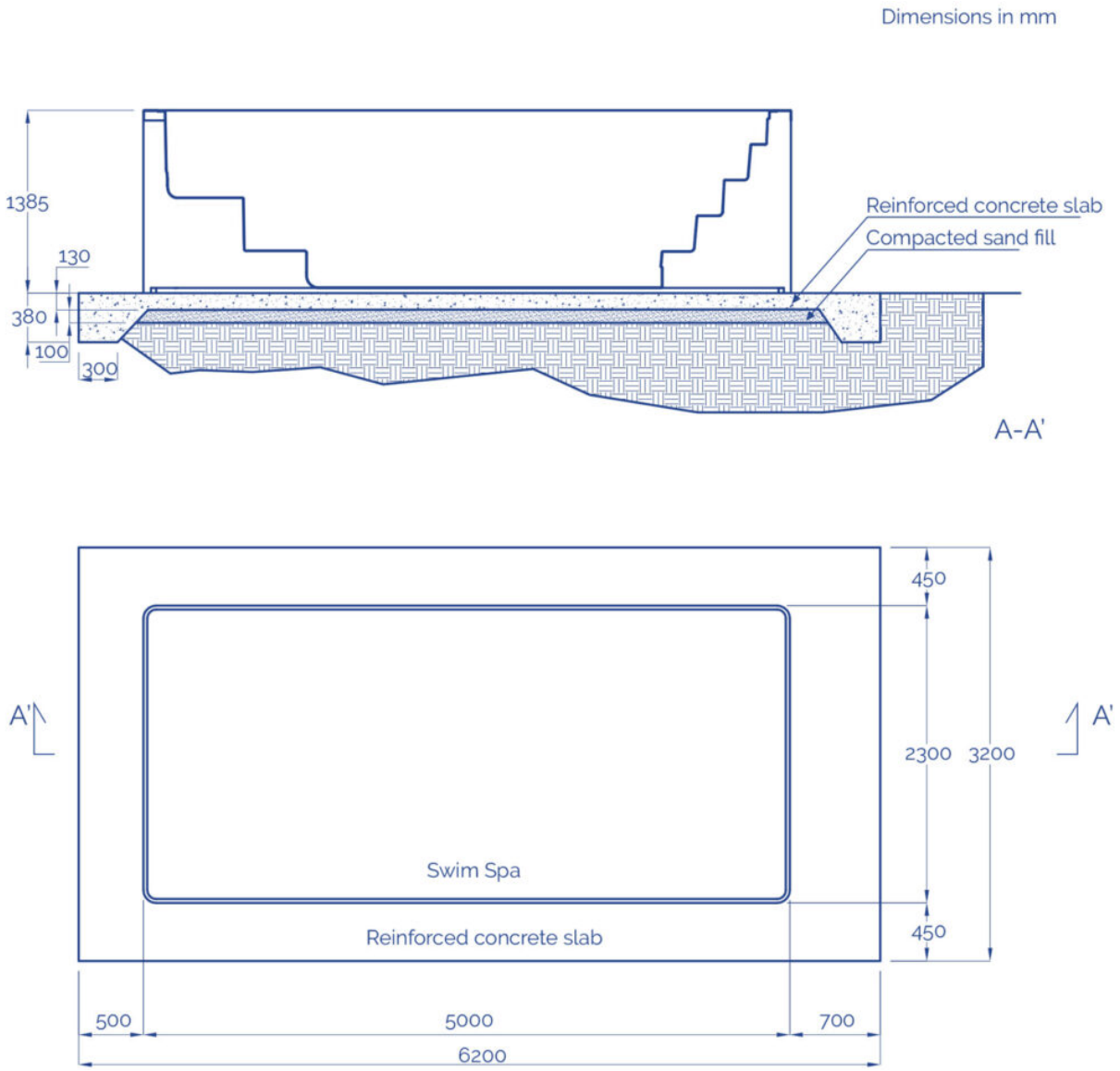

Notes:

This is a picture/illustrative example. It is recommended that an architect or engineer be consulted about the design and building work to ensure that the land is able to withstand the foundation slab when the swimspa is full of water, including the weight of the people who will be using it and the furniture or any other articles that will be in the area around the foundations. Local regulations on foundations and/or building work must also be complied with.

INGROUND VERSION

The Spa structure must be fixed on the floor. Do not hold the Spa by its outer edges.

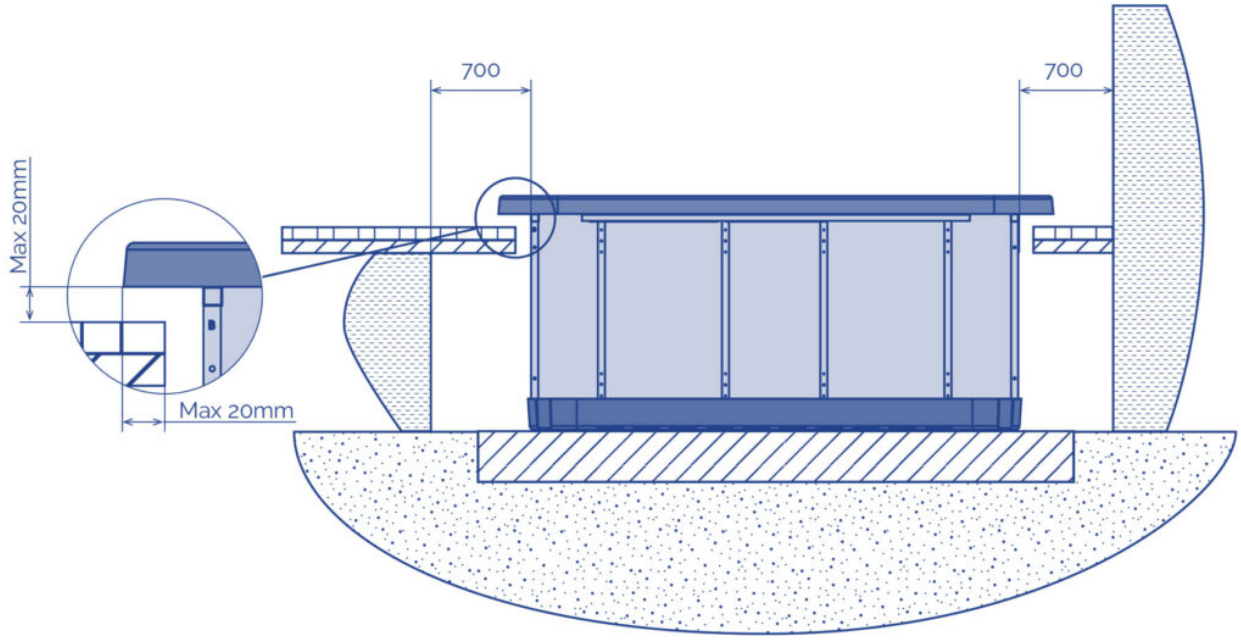

Once settled the Spa, finish the work bearing in mind that the edging of the surface must not be in direct contact with the work (a minimum of 1 cm must be left around the edge).

Bear in mind that you will have to leave enough space around the spa for maintenance. This space should be at least of 0.7 meters.

To seal the tab to the Spa, use a special elastic silicone for aquatic installations.

ATTENTION
Leave a trapdoor spa access for maintenance. Never cover with concrete.
LEAVE 70cm CLEARANCE AROUND THE SPA.

ATTENTION
The underground version does not come with a cabinet. In the case of a semi-buried spa with furniture, the warranty does not cover possible consequences of a defect or damage to the product.

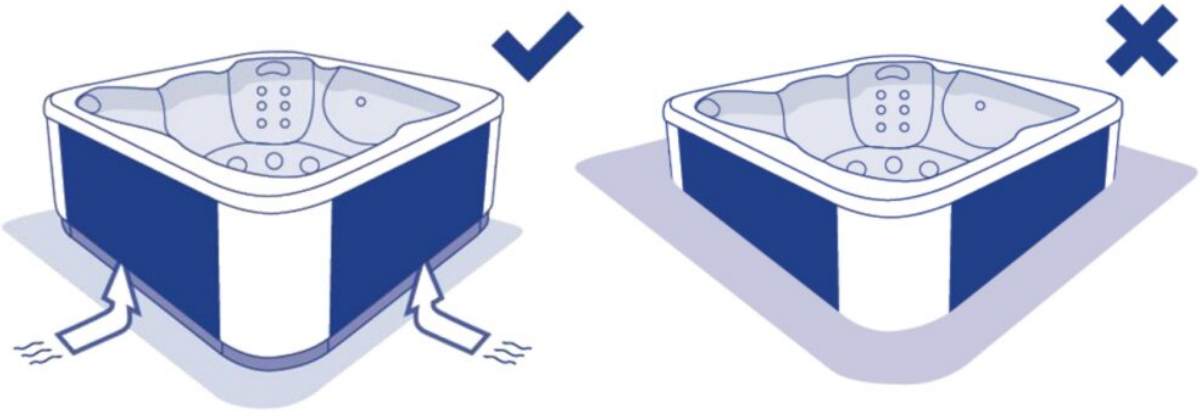

3.3. Drainage

The Spa has a manual emptying system by gravity, through a drainage valve of 3/4”.

The drainage valve should always be closed. It should only be open when the Spa is emptied.

If necessary, a drainage system can be installed to connect the Spa to the general drains of the house.

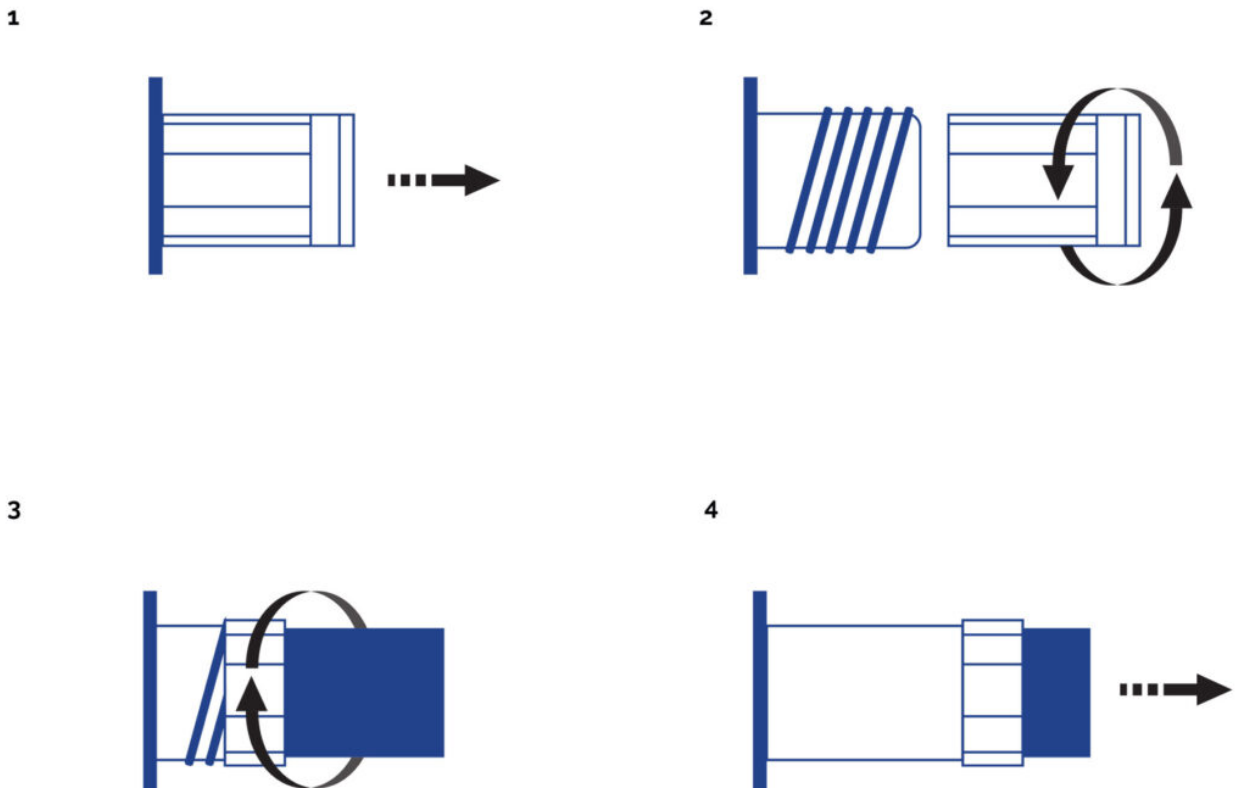

ATTENTION
Remember that when you drain your spa not all of the water runs off.
If your spa is not going to be used for long periods, especially in winter, remove any stagnant water on the seats and on the bottom of the spa with a sponge.
Any water remaining in the pipes can be sucked out through the water and air nozzles using a liquid suction pump. The pumps must also be emptied through the drain plug.

3.4. Filling the spa

PORTABLE SPA

The Spa does not have a specific filling system. It is recommended to use a manual filling system with a garden hose or similar.

Proceed as follows:

• Before starting filling the Spa, locate the drain valve (see 3.3. Drainage) and ensure that it is in the CLOSED position.

• Fill the Spa through the top, with clean water, to the level indicated.

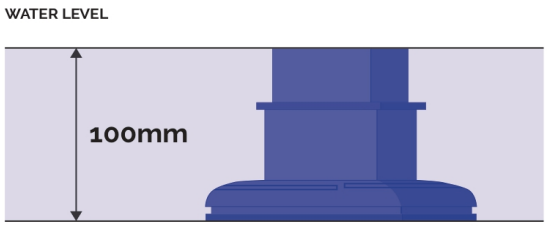

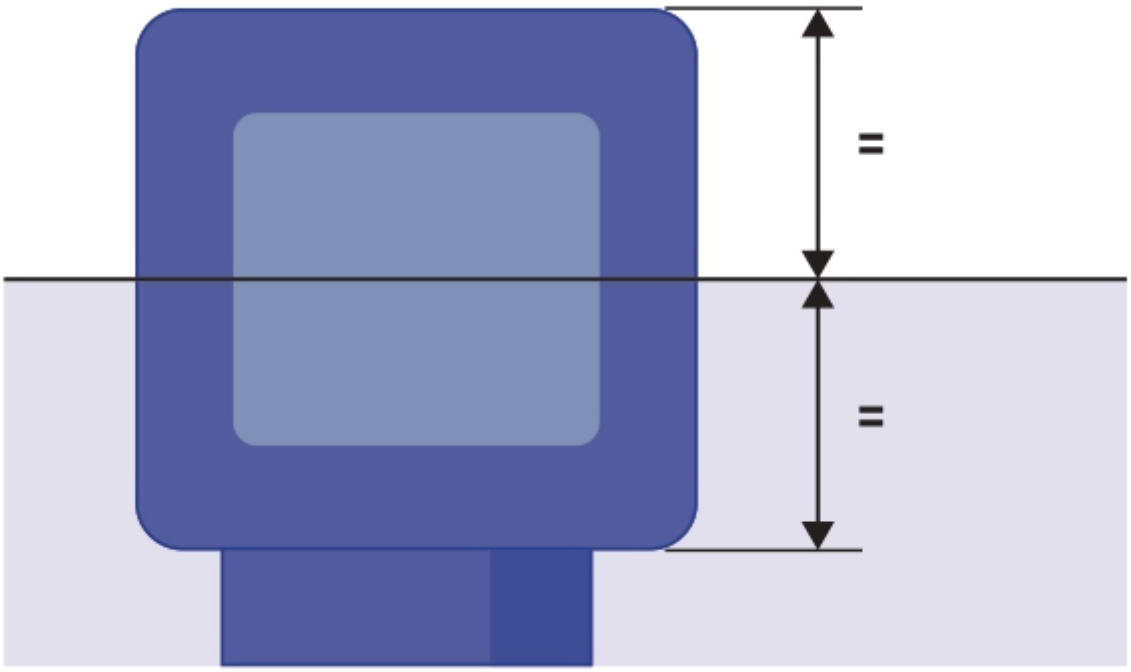

PORTABLE OVERFLOW SPA

It is recommended to fill the spa manually using a garden hose or a similar system.

Proceed as follows:

Before filling the spa, find the drainage valves and ensure they are all closed, except for the safety outlet, which should always be open.

Fill the spa from above using clean water until the spa starts to overflow.

Fill the three water tanks with the automatic filling.

Connect the water supply to one of the tanks' inlets.

The spa has a filling system that works using a ball cock. The outlet of the ball cock must be connected to the mains supply at a constant water pressure.

When the spa loses water as a result of evaporation, the system automatically fills the tanks.

The compensation tanks have a safety outlet for removing water.

WARNING
The compensation tanks of private overflow spas have a limited capacity.
They can hold 280 litres of water, equivalent to 4 partially submerged people.
Users should enter the spa one by one and slowly to enable the tanks to absorb the displaced water and prevent water from flowing out of the spa.

ATTENTION
During the filling process, water should be prevented from entering electrical parts. If seawater is used in the Spa, the circuit components will quickly deteriorate.

Do not fill the Spa with hot water, as this could trigger off the safety thermostat and damage equipment and connections.

Once the Spa has been filled with water, connect the electrical equipment by placing the differential switch in the On position (See Electrical Connection).

Do not use the Spa without first carefully reading all the information detailed in the following points:

• Adjust water ph between 7,2 and 7,6 (see 4.0 section).

• Add all required chemical products recommended in water maintenance (see 6.2 section)

• Select the required temperature (see Installation and assembly of the spa). remember that if the water is cold, it may take 24 hours to reach a temperature of 38ºc.

• Before using the spa, check the ph values once again in case they have changed with the treatments indicated above.

3.5. Electrical connections

ATTENTION
-This equipment cannot be connected to a normal plug.
-This equipment requires suitable electrical installation. This should be done by a specialised fitter following local electrical safety regulations of each country.
-The electrical input of the Spa should always be protected by a highly sensitive differential. A 30 mA differential is recommended.
-Earthing connection is essential.
-Use a suitable section cable bearing in mind the power of the Spa and distance to the control panel.
-Always follow instructions given in the Safety Warnings chapter of this manual.

WARNING- RISK OF ELECTRIC DISCHARGE
-The electrical supply should be switched off (differential in the OFF position or disconnect the cable from the mains) before carrying out any work.
-Never try to access an electrical component unless you are qualified or are the Head of Maintenance.
-Always use suitable personal protection equipment and tools when handling electrical equipment.
-Never access electrical elements if you are wet, particularly if you have wet feet
-Do not connect the electrical equipment (differential in the ON position), if the Spa is empty of water.

SPA CONNECTION STEPS

Locate the electrical panel of the Spa.

Locate the electrical control panel; to do this, open the side panel to access the electrical components.

Open the electrical box.

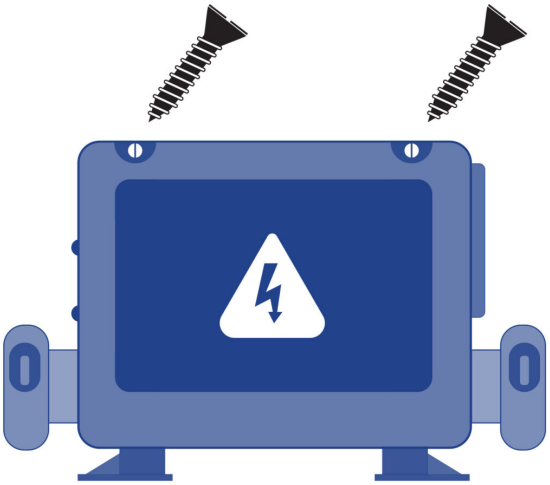

Connect the spa’s electrical control panel to the diferential switch.

INSTALLATION OF THE DIFFERENTIAL

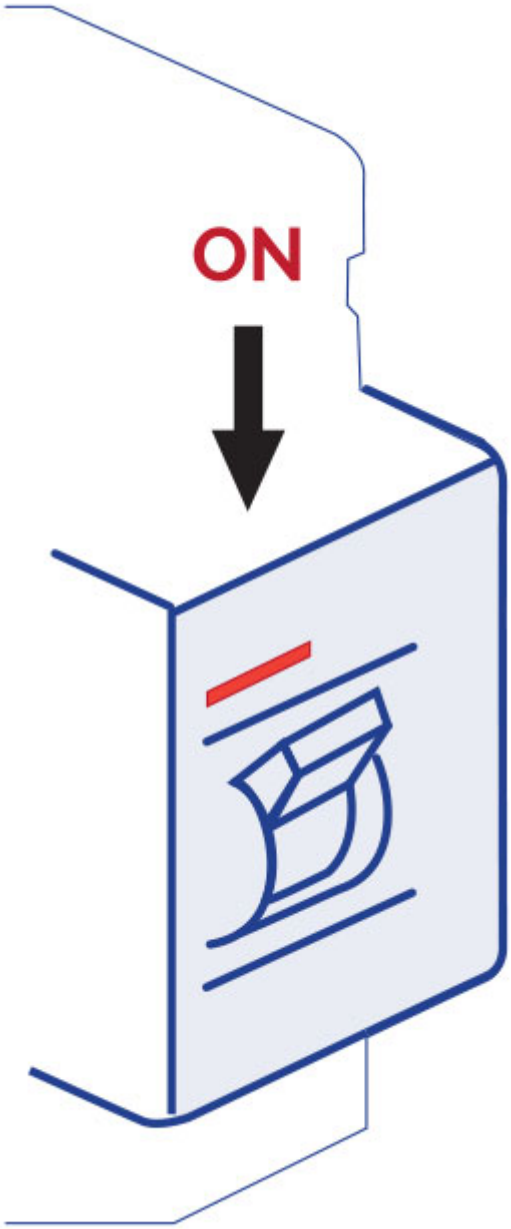

The electrical installation should incorporate a high-sensitive 2-pole differential in the general mains input panel (the differential is not supplied with the Spa).

WARNING
It is essential that the owner of the Spa tests the differential switch at least once a month, to check its good working order.
Check that the differential is in the OFF position. Do not place the differential in the ON position until the Spa is filled with water.

CONNECT THE ELECTRICAL CONTROL PANEL TO THE DIFFERENTIAL SWITCH

Before carrying out any work on the Spa, make sure it is disconnected from the mains (differential switch in the OFF position, or disconnect the cable from the mains).

Use a suitable cable from the differential switch to the electric cabinet of the Spa, depending on

the location and applicable law. The cable section will vary depending on the Spa model and the distance of the installation.

The required kW are indicated in the appendix Technical Specifications of the Spa. The maximum power must be considered, depending on the “High Amp” or “Low Amp” configuration.

DIP Switch Functions

Fixed-Function DIP Switches

A1 Test Mode (normally off).

A2 In “ON” position, add one high-speed pump (or blowe) with Heater.

A3 In “ON” position, add two high-speed pumps (or 1 HS Pump and Blower) with Heater.

A4 In “ON” position, add four high-speed pumps (or 3 HS Pumps and Blower) with Heater.

A5 In “ON” position, enables Special Amperage Rule B. See Special Features section under Configuration Options for functionality with your system. In “OFF” position enables Special Amperage Rule A.

A6 Persistent memory reset (Used when the spa is powering up to restore factory settings as determined by software configuration).

A2, A3 and A4 work in combinatio to determine the number of high-speed devices and blowers that can run before the heat is disabled. f.e. A2 and A3 in the ON position and A4 in the OFF position will allow the heater to operate with up to 3 high-speed pumps (or two HS Pumps and Blower) runing at the same time. Heat is disabled when the fourth high-speed pump or blower is turned on.

Note: A2/A3/A4 all ogg = No heat with any high-speed pump or blower.

Assignable DIP Switches

A7 In “ON” position, enables a 5-minutes cool down for some gas heaters (Cooling Time B). In “OFF” position, enables a 1-minute cool down for electric heaters (Cooling Time A).

Undesignted switches are not assigned a function.

The Electric Specification Sheet attached at the end of this manual indicates both the “Low Amp” and the “High Amp” power.

Special Features

Special Features

Feature	Default
Special Amperage Rule A	No Limitation
Special Amperage Rule B	2 high-speed pumps max. Blower turns off with 2 high speed pumps - in Setups 1-4, 6-10, 13, 15, 16, 18 No Limitation - in Setups 5, 11, 12, 14, 17

CABLE SECTION

To determine the cable section of the electrical installation, see the values indicated in this sheet and the following table:

Kw required

2,1	2,5	2,8	3,2	3,5	4,4	5,3	6,2	7,0	7,9	8,8

Nominal section of the cable in mm^2

Distance											
6-11 m	2,5	2,5	2,5	2,5	4	4	6	10	10	10	10
11-15 m	2,5	2,5	4	4	4	6	6	10	10	10	10
15-20 m	4	4	4	6	6	6	10	10	10	16	16

For longer distances, increase the cable section accordingly.

Some configurations may require installing 1 32A line, 2 16A lines or even one three-phase line (3 x 16A) to cover the power required by the Spa.

The different configuration options of the electrical control panel are explained further on in this Installation Manual.

Remember that the installation and any changes in the electric configuration must be carried out by qualified personnel, following the current regulations in each country.
The manufacturer shall not be responsible for any damage caused by an improper installation or an installation performed by non-qualified personnel.

WARNING
Pay attention to the position of the maximum consumption switch.
The Spa will not operate properly if a cable not corresponding to the distance and power of the Spa is used, and the electrical circuits may overheat which may cause an electrical accident. Always use cable with the suitable section of maximum consumption. **In the event of doubt between two values, always use the cable with the greater section.**

To connect the supply to the electrical panel of the Spa, locate the packing gland positioned at one end of the electrical panel.

Make sure that there is no electric current in the connection cable (differential switch in the OFF position).

Take the cable to the Spa electrical panel.

Open the cover of the electrical cabinet, insert the feed cable through the free side.

Attention: the indicated blue cable is neutral, and the brown cable indicates the line or phase.

Fasten the terminals as indicated in the following diagrams and the type of electrical supply.

Single line

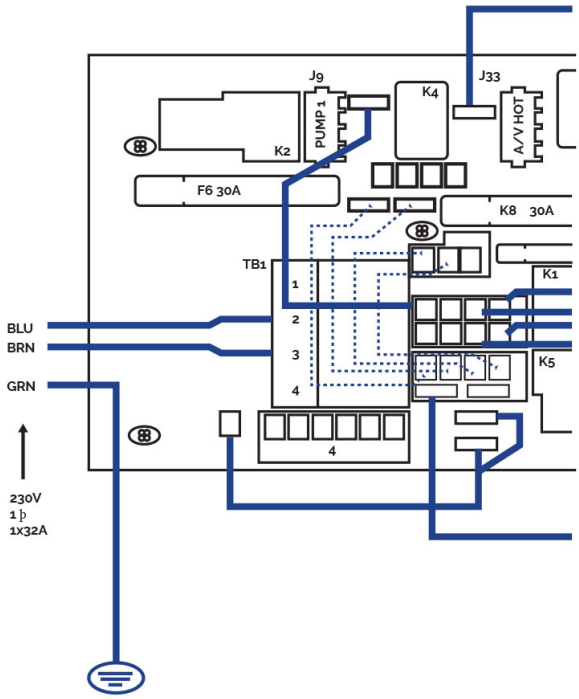

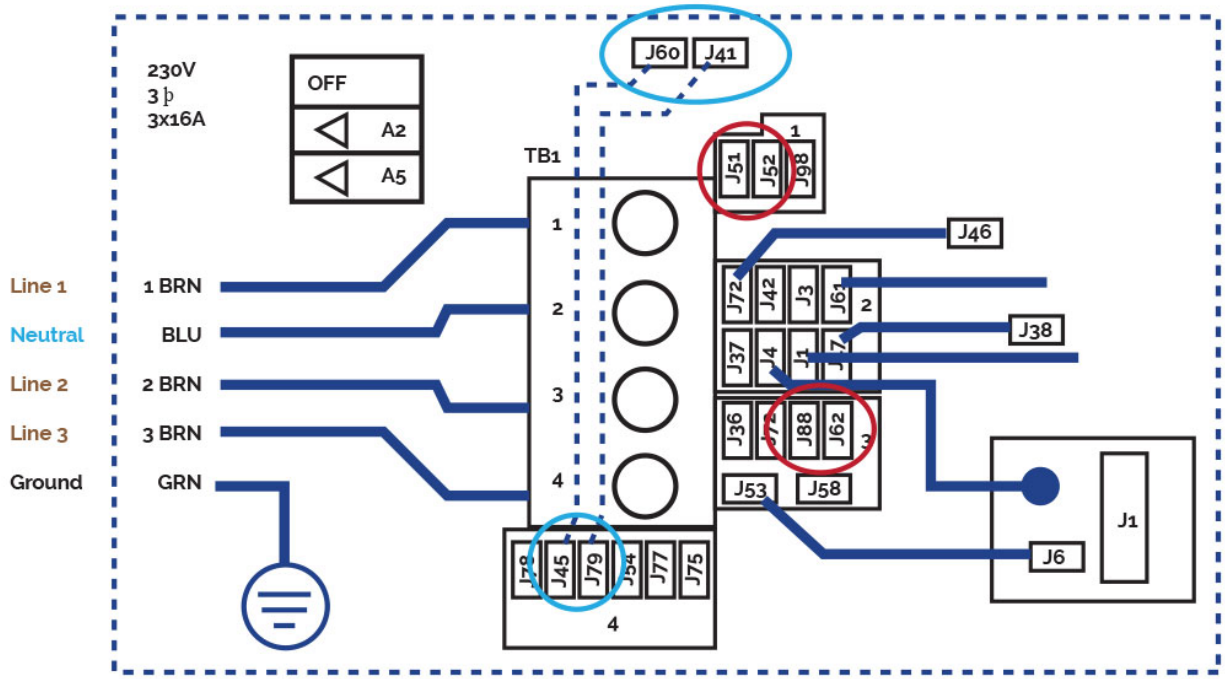

Three-phase line 380V III
BP21G1WL

Remove bridges;
J51-J88 and J52-J62
Changes this bridges
J60-J36 -> TO J60-J45
J41-J12 -> TO J41-J79

Power requirements:
3 Services 5 wires: Line 2, Line2, Line 3, Neutral, Ground 400VCA, 50/60Hz 3 phase, 16A (Circuit breaker rating - 20A max each phase line).

THREE PHASES 400V

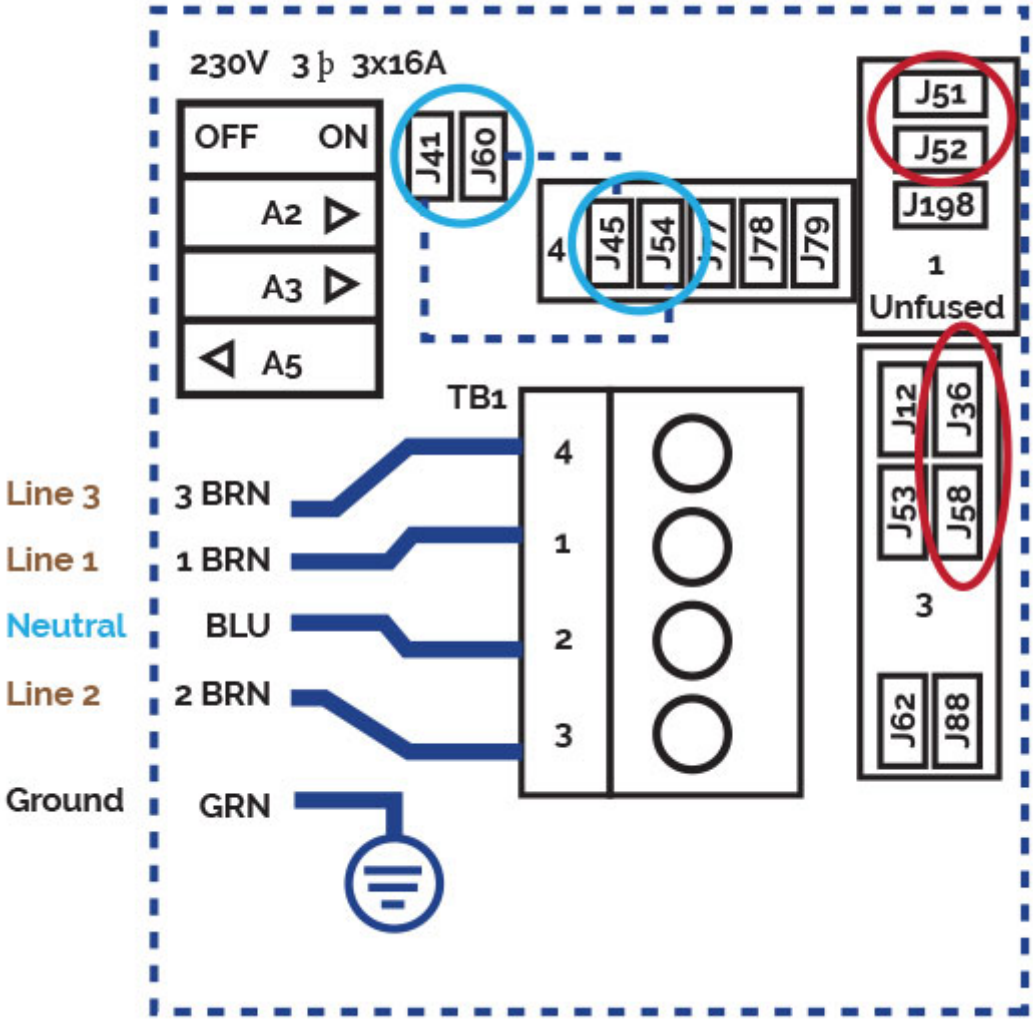

Three-phase line 400V
BP6013G1 & BP6013G2

Remove jumpers:
disconnect J51 and J58
disconnect J52 and J36
Changes this bridges:
J41 -J53 -> TO J41 - J54
J60-J12 -> TO J60-J45
Put DIP switches A5 on OFF and A2, A3 on ON position.
Power requirements:

3- Service 5 wires: Line 2, Line 2, Line 3, Neutral, Ground 400VCA, 50/60 Hz* 3 phase, 16A (Circuit breaker rating = 20A max each phase line). *BP systems automatically detect 50Hz vs 60Hz

ATTENTION
Correct earthing is essential
The earthing circuit of the building should always be in perfect condition to guarantee the safety of Spa users. If you have any doubts on this, ensure that the earthing circuit is checked by a duly qualified person. The manufacturer will not be held responsible for possible damage caused by incorrect maintenance of the earthing circuit.

Fasten the earth cable (yellow and green) to the terminal on the outside of the control cabinet as shown in the following diagram:

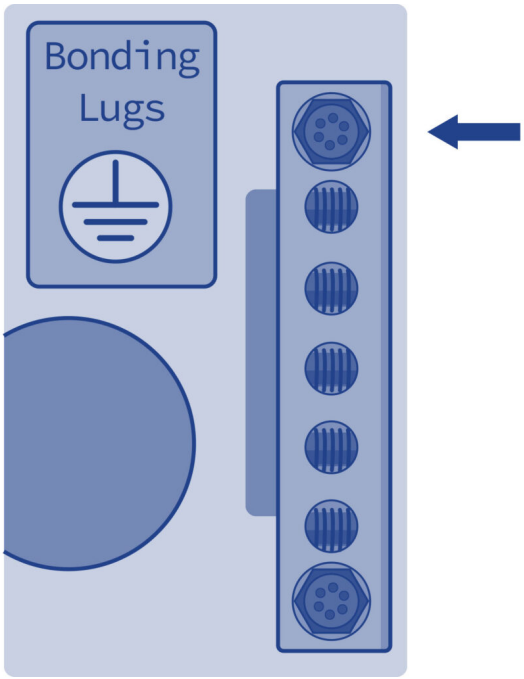

EARTH

WARNING
Do not connect the electricity (differential in the ON position) until the Spa is filled with water.

4. Start-up

4.1. System start-up

Check the following configurations before using your spa depending on your spa system:

· TP-600

TEMPERATURE CONFIGURATION | TP600

When using a panel with Up and Down buttons (Temperature buttons), pressing Up or Down will cause the temperature to flash. Pressing a temperature button again will adjust the set temperature in the direction indicated on the button. When the LCD stops flashing, the spa will heat to the new set temperature when required.

If a Temperature button is pressed and held when the temperature is flashing, the temperature will continue to change until the button is released.

PRE-SET FILTER CYCLES | TP600

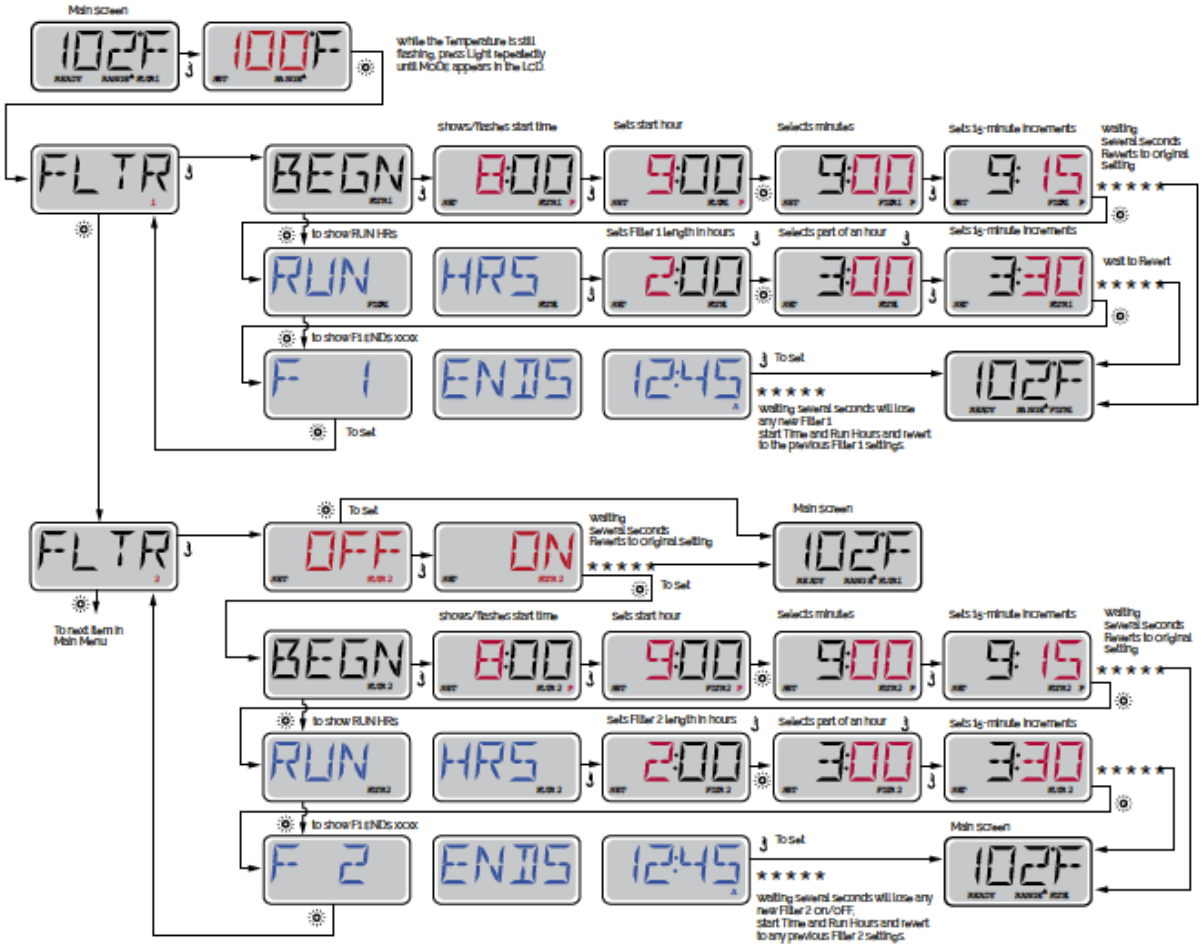

· **TOUCH PANEL**

TEMPERATURE CONFIGURATION | TOUCH PANEL

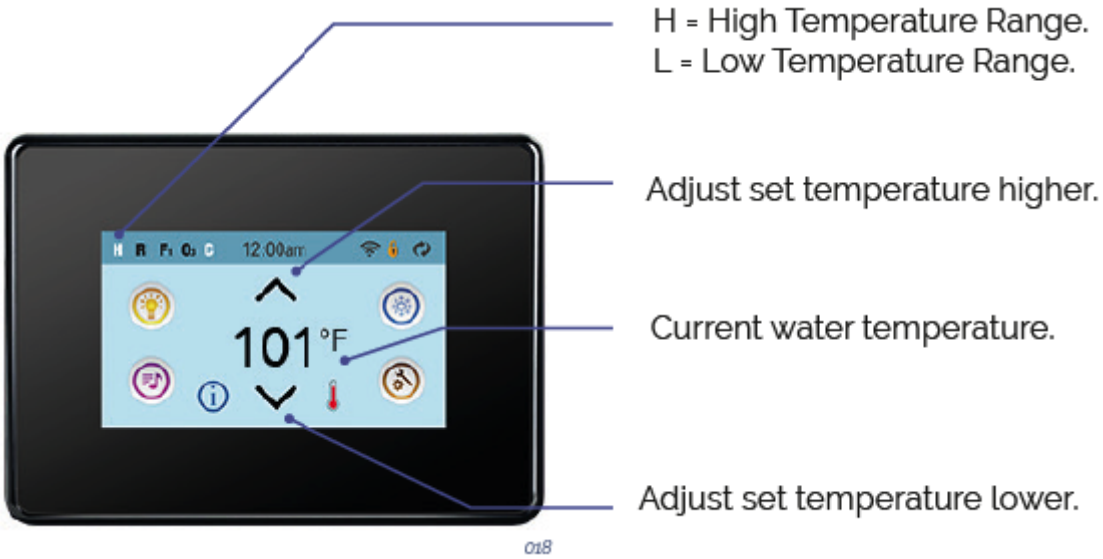

PRE-SET FILTER CYCLES | TOUCH PANEL

main filtration

Using the same adjustment as Setting the Time, Filter Cycles are set using a start time and a duration. Each setting can be adjusted in 15-minute increments. The panel calculates the end time and displays it automatically.

The Filter Icon on the Settings Screen takes you to a screen where you control the Filter Cycles.

filter cycle 2 - optional filtration

Filter Cycle 2 is OFF by default. Press “1” to view Filter 1. Press “2” once to view Filter 2. Press “2” again to turn Filter 2 ON or OFF. When Filter Cycle 2 is ON, it can be adjusted in the same manner as Filter Cycle 1. It is possible to overlap Filter Cycle 1 and Filter Cycle 2, which will shorten overall filtration by the overlap amount.

4.2. Water treatment

Checking the water status is one of the most important steps.

pH ADJUSTMENT

A pH index of between 7.2 and 7.6 is recommended.

The pH level measures the acidity and alkalinity: Values above 7 are alkali and below 7, are acid.

ATTENTION
It is very important to maintain the correct pH level both for the disinfectant to work properly and to prevent corrosion or deposits on the Spa. Any damage caused by an inadequate pH level is not covered by your Spa guarantee.

- The effects of a very low pH level are:

- The disinfectant will quickly dissipate.

- The equipment of the Spa become rusty.

- The water can start causing skin irritations to bathers.

- The effects of a very high pH level are:

- The disinfectant is less effective.

- Scale may appear on the acrylic and equipment.

- The water may become cloudy.

- The filter cartridge can become blocked.

Check the pH of the Spa water daily using the pH test set. (not supplied)

If the pH is above the indexes, use pH MINOR SPA. Wait for two hours and re-do the pH test.

If the pH is below indexes, use pH MAJOR SPA. Wait for two hours and re-do the pH test.

When the pH index has been adjusted to the values indicated above, proceed to the next step.

DISINFECTION OF THE WATER

Disinfection of the water is of utmost importance in order to destroy algae, bacteria and organisms that could develop in the water. However, excessive disinfection could cause skin and eye irritation.

BROMIDE TABLETS are a suitable disinfectant for the Spa water. This product is placed in the pre-filter and gradually dissolves.

Check the residual bromide level daily using the Br analyser set.

The recommended level of residual bromide is between 2.2 and 3.3 ppm.

Do not forget to keep the water in good conditions (see 6.2 Water maintenance)

5. Operating instructions

5.1. Warnings on the use of the spa

Carefully read the following lines regarding accident prevention:

- Do not start-up the Spa unless it is full of water.
- This appliance can be used by children aged from 8 years and above and persons with reduced physical, sensory or mental capabilities or lack of experience and knowledge if they have been given supervision or instruction concerning use of the appliance in a safe way and understand the hazards involved.
- Children shall not play with the appliance.
- Cleaning and user maintenance shall not be made by children without supervision.
- Take extreme precautions to stop children from entering the Spa unattended. To avoid accidents, ensure that children are supervised at all times. Never leave children alone in the Spa. Take care when entering and leaving the Spa to avoid slipping on wet surfaces.
- Do not allow anybody to play with sharp or metal objects inside the Spa, which could damage the acrylic surface.
- Do not allow any user to access to the electrical parts of the Spa.
- Do not use electronic devices inside the Spa.
- Do not let animals go inside the Spa.
- Do not fill the Spa with other liquid other than fresh, duly treated water.
- Do not fill the Spa with hot water (maximum 35ºC); let the water heat by itself, otherwise it could damage the temperature probes (see “Temperature Adjustment”).
- Do not use the Spa immediately after intense physical exercise.
- Do not use the Spa if you are suffering from a contagious disease or 14 days after recovering from a contagious disease.
- In order to guarantee maximum safety when bathing all our Spas use pumps designed to suction water from anti-vortex, safety drain covers, located on the floor of the Spa. Take special care that these drain covers are not covered by any object or the users (pieces of clothing, hair, legs, etc.). For safety reasons, your head should always be outside the Spa in order to avoid drowning. Do not use the Spa if the drain covers are broken, damaged or unassembled, as apart from damaging the Spa, it could also lead to a risk of drowning.
- The headrests of your Spa are made of synthetic foam, which can be damaged in high concentrations or bromine or chlorine, or low levels of pH. Make sure that when adding chemical products, the headrests are neither totally nor partially immersed in the water. If necessary, remove them until the chemical products have taken effect. Damages resulting from improper use shall not be considered under the guarantee of the product.
- The Spa includes a cover designed to protect the acrylic surface from sunrays when it is not being used. This cover will also help to keep the water warm. and for sun protection that could damage the acrylic material of the Spa. The cover will require.
- The appliance should be installed through a residual current device (RCD) with a rated tripping current not exceeding 30 mA
- The cover is designed to protect the spa, not to bear weight. Not even water or snow. Do not place objects on top of the cover. Do not allow people or animals get on the cover. Periodically remove snow to prevent buildup.
- The water should be disinfected thoroughly before using the Spa, especially if it has not been used for a certain period of time, whether or not it has been left with or without water inside. During periods of non-use, traces of stagnant water may remain, which may cause the growth of micro organisms potentially dangerous for health. Therefore, disinfect the Spa as indicated in this manual, ensuring that the pH and disinfectant parameters are suitable.

ATTENTION
The compensation tanks of private overflow spas have a limited capacity.
They can hold 280 litres of water, equivalent to 4 partially submerged people.
Users should enter the spa one by one and slowly

to enable the tanks to absorb the displaced water and prevent water from flowing out of the spa.

RISKS OF HYPERTHERMIA

Prolonged, direct contact with hot water could cause hyperthermia.

This occurs when the internal body temperature reaches levels above the normal temperature of 36.5ºC. It is advised not to bathe for longer than 15 minutes.

Symptoms of hyperthermia are a sudden drop in blood pressure resulting in a sensation of dizziness with the possibility of fainting.

Water temperatures between 37ºC and 40ºC are only considered safe for adults without any health problems. Lower temperatures are recommended for the majority of people and children. The Spa water should never be above 40ºC.

WARNING
Alcohol, drugs or medicines could increase the risk of hyperthermia.
It is not advisable for pregnant women, patients with high blood pressure, a heart condition, diabetes or under medication to use the spa. You should seek doctor's advice.

5.2. Systems

EXISTING SYSTEMS

Your spa is equipped with an electronic control system that will enable you to regulate the temperature of the water, choose the filter cycle that best suits your needs and activate the massage pumps and the blower pump. It will also enable you to turn on your spa lighting, change its colour and sequence. Depending on the design, your spa will have one of the following systems:

TP500 - TP500S

TP600

2 Speed pump

Heater

Spotlight

Circulation Pump

Massage Pumps

Turbo-Blower pump

Heater

Spotlight

Circulation Pump

2 Massage Pumps

Heater

Spotlight

AUX

2 Massage Pump

Pump

portlight (s)

Massage Pump

Sportlight (s)

Touch Panel

24

5.3. System Control and Configuration

5.3.1 Control system for TP500-TP500S

DISPLAY ICONS | TP500 – TP500S

A - Heat **G -** Cleanup cycle **M -** Set (programming)
B - Ready mode **H -** Jets 1 **N -** Filter Cycle (1 or 2 or Both)
C - Rest Mode **I -** Jets 2 **O -** AM or PM(Time)
D - bbaTM 2 On **J -** Blower
E - WiFi (Cloud Connection) **K -** Auxiliary (Jets 3)
F - Light **L -** Temperature Range (High/Low)

PREPARATION AND FILLING | TP500 – TP500S

Fill the spa to its correct operating level. Be sure to open all valves and jets in the plumbing system before filling to allow as much air as possible to escape from the plumbing and the control system during the filling process.
After turning the power on at the main power panel, the top-side panel display will go through specific sequences. These sequences are normal and display a variety of information regarding the configuration of the hot tub control.

PRIMING MODE – M019 | TP500 – TP500S

This mode will last for 4-5 minutes, or you can manually exit the priming mode after the pump(s) have primed.

Regardless of whether the priming mode ends automatically, or you manually exit the priming mode, the system will automatically return to normal heating and filtering at the end of the priming mode. During the priming mode, the heater is disabled to allow the priming process to be completed without the possibility of energizing the heater under low-flow or no-flow conditions. Nothing comes on automatically, but the pump(s) can be energized by pushing the “Jet” buttons.

If the spa has a Circ Pump, it can be activated by pressing te "Light" button during Priming Mode.

PRIMING THE PUMBS | TP500 – TP500S

As soon as the above display appears on the panel, push the “Jets” button once to start Pump 1 in low-speed and then again to switch to high-speed. Also, push the “Jets 2” or “Aux” button, if you have a 2nd pump, to turn it on. The pumps will now be running in high- speed to facilitate priming. If the pumps have not primed after 2 minutes, and water is not flowing from the jets in the spa, do not allow the pumps to continue to run. Turn off the pumps and repeat the process.
Note: Turning the power off and back on again will initiate a new pump priming session. Sometimes momentarily turning the pump off and on will help it to prime. Do not do this more than 5 times. If the pump(s) will not prime, shut off the power to the spa and call for service.
Important: A pump should not be allowed to run without priming for more than 2 minutes. Under NO circumstances should a pump be allowed to run without priming beyond the end of the 4-5 minutes priming mode. Doing so may cause damage to the pump and cause the system to energize the heater and go into an overheat condition.

EXITING PRIMING MODE | TP500 – TP500S

You can manually exit Priming Mode by pressing the “Warm” or “Cool” button. Note that if you do not manually exit the priming mode as described above, the priming mode will be automatically terminated after 4-5 minutes. Be sure that the pump(s) have been primed by this time. Once the system has exited Priming Mode, the top-side panel will momentarily display the set temperature, but the display will not show the water temperature yet, as shown below. This is because the system requires approximately 1 minute of water flowing through the heater to detemine the water temperature and display it.

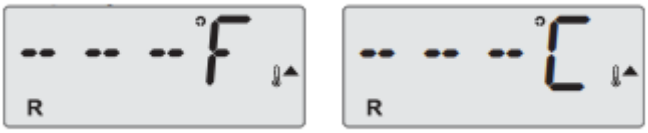

SPA BEHAVIOUR | TP500 – TP500S

Pumps
Press the “Jets” button once to turn pump 1 on or off, and to shift between low and high speeds if equipped. If left running, the pump will turn off after a time-out period.
On non-circ systems, the low speed of pump 1 runs when the blower or any other pump is on. If the spa is in Ready Mode, Pump 1 low may also activate occasionally for at least 1 minute to detect the spa temperature (polling) and then to heat to the set temperature if needed. When the low speed turns on automatically, it cannot be deactivated from the panel, however the high speed may be started. If the system is equipped with a circ pump, it will be configured to work in one of three different ways:

1. The circ pump operates continuously (24 hours) except for turning off for 30 minutes at a time when the water temperature reaches 3°F (1.5°C) above the set temperature (most likely to happen in very hot climates).
2. The circ pump stays on continuously, regardless of water temperature.
3. A programmable circ pump will come on when the system is checking temperature (polling), during filter cycles, during freeze conditions, or when another pump or blower is on.

This specific circulation mode that is used has been determined by the Manufacturer and cannot be changed in the field.

Filtration and Ozone

On non-circ systems, Pump 1 low and the ozone generator will run during filtration. On circ systems, the ozone will run with the circ pump. The system is factory-programmed with one filter cycle that will run in the evening (assuming the time-of-day is properly set) when energy rates are often lower. The filter time and duration are programmable. A second filter cycle can be enabled as needed. At the start of each filter cycle, all water devices (other than the primary pump) will run briefly to purge the plumbing to maintain good water quality. The term “water devices” includes the Blower.

Freeze Protection

If the temperature sensors within the heater detect a low enough temperature, then the pump(s) and the blower automatically activate to provide freeze protection. The pump(s) and blower will run either continuously or periodically depending on conditions. In colder climates, an optional freeze sensor may be added to protect against freeze conditions that may not be sensed by the standard sensors. Auxiliary freeze sensor protection acts similarly except with the temperature thresholds determined by the switch. See your dealer for details.

TEMPERATURE AND TEMP RANGE | TP500 – TP500S

Adjusting the Set Temperature

When using a panel with Up and Down buttons (Temperature buttons), pressing Up or Down will cause the temperature to flash. Pressing a temperature button again will adjust the set temperature in the direction indicated on the button. When the LCD stops flashing, the spa will heat to the new set temperature when required. If the panel has a single temperature button, pressing the button will cause the temperature to flash. Pressing the button again will cause the temperature to change in one direction (e.g., UP). After allowing the display to stop flashing, pressing the Temperature Button will cause the temperature to flash and the next press will change the temperature in the opposite direction (e.g., DOWN).

Press-and-hold

If a Temperature button is pressed and held when the temperature is flashing, the temperature will continue to change until the button is released. If only one temperature button is available and the limit of the Temperature Range is reached when the button is being held, the progression will reverse direction.

Dual Temperatures Ranges

This system incorporates two temperature range settings with independent set temperatures. The High Range designated in the display by a thermometer and an “up” arrow, and the Low Range designated in the display by a thermometer and “down” arrow.

These ranges can be used for various reasons, with a common use being a “ready to use” setting vs. a “vacation” setting. The Ranges are chosen using the menu structure below. Each range maintains its own set temperature as programmed by the user. This way, when a range is chosen, the spa will heat to the set temperature associated with that range. For example:

High Range might be set between 80°F and 104°F

Low Range might be set between 50°F and 99°F

More specific Temp Ranges may be determined by the Manufacturer

Freeze Protection is active in either range

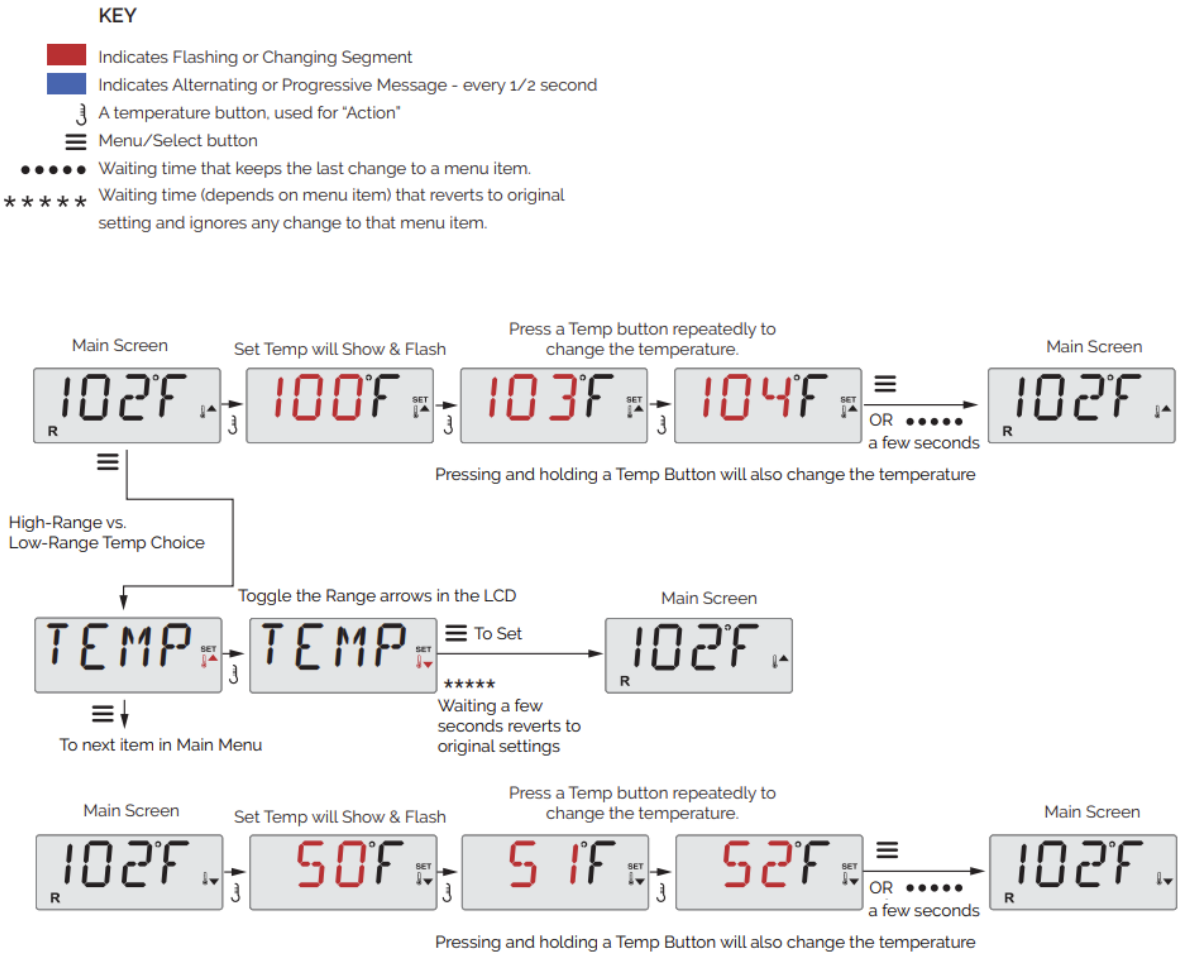

MODE – READY AND REST | TP500 – TP500S

In order to heat, a pump needs to circulate water through the heater. The pump that performs this function is known as the "primary pump".
The primary pump can be either a 2-Speed Pump 1 or a circulation pump. If the primary pump is a 2-Speed Pump 1, Ready Mode (indicated by R) will circulate water periodically, using Pump 1 Low, to maintain a constant water temperature, heat as needed, and refresh the temperature display. This is known as "polling."
Rest Mode (indicated by R) will only allow heating during programmed filter cycles. Since polling does not occur, the temperature display may not show a current temperature until the primary pump has been running for a minute or two.
If the spa is configured for 24HR circulation, the primary pump generally runs continuously. Since the primary pump is always running, the spa will maintain set temperature and heat as needed in Ready Mode, without polling.
In Rest Mode, the spa will only heat to set temperature during programmed filter times, even though the water is being filtered constantly when in Circulation Mode.

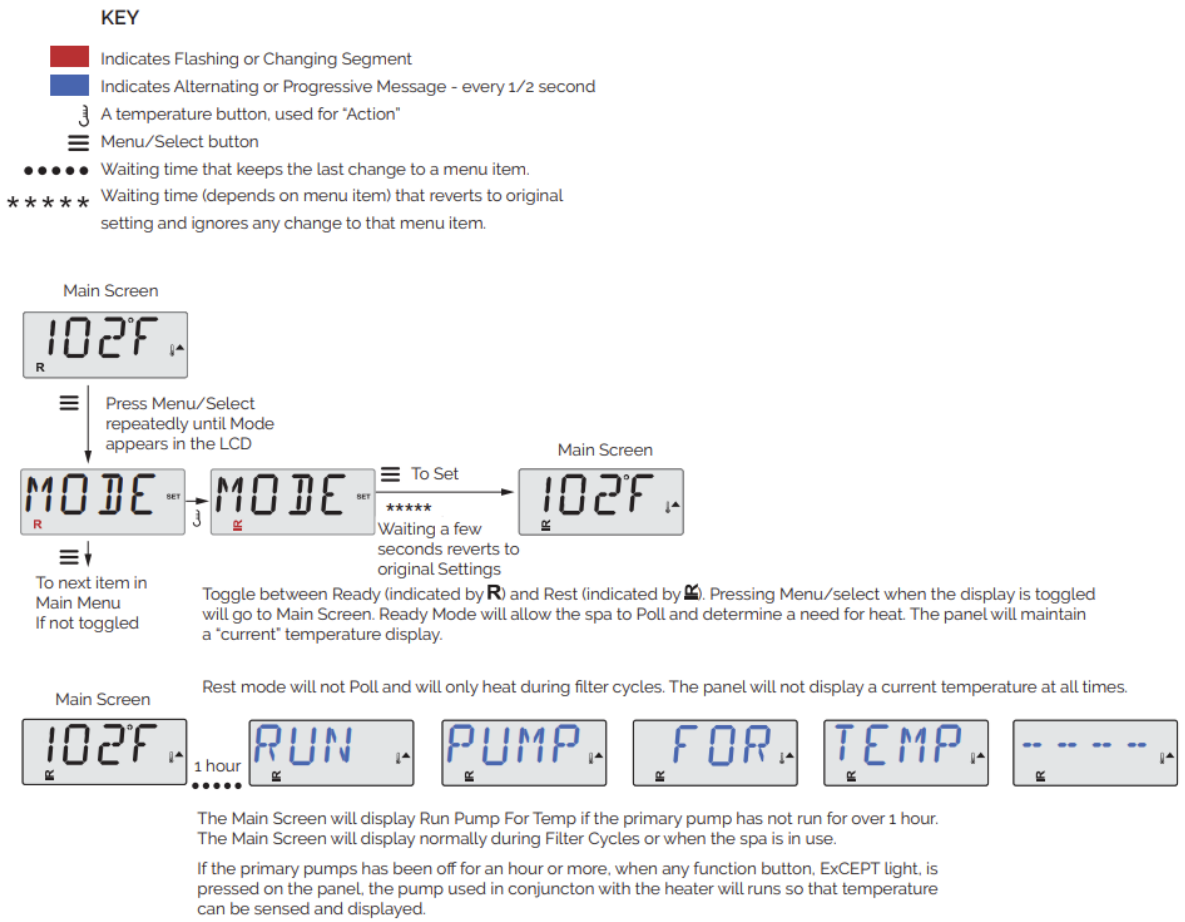

Ready-in-Rest Mode

R R appears in the display if the spa is in Rest Mode and "Jets" is pressed. It is assumed that the spa is being used and will heat to set temperature. The primary pump will run until set temperature is reached, or 1 hour has passed. After 1 hour, the System will revert to Rest Mode. This mode can also be reset by entering the Mode Menu and changing the Mode.

ADJUSTING FILTRATION | TP500 – TP500S

Filter cycles are set using a start time and a duration. Start time is indicated by an "A" or "P" in the bottom right corner of the display. Duration has no "A" or "P" indication. Each setting can be adjusted in 15 minute increments. The panel calculates the end time and displays it automatically.

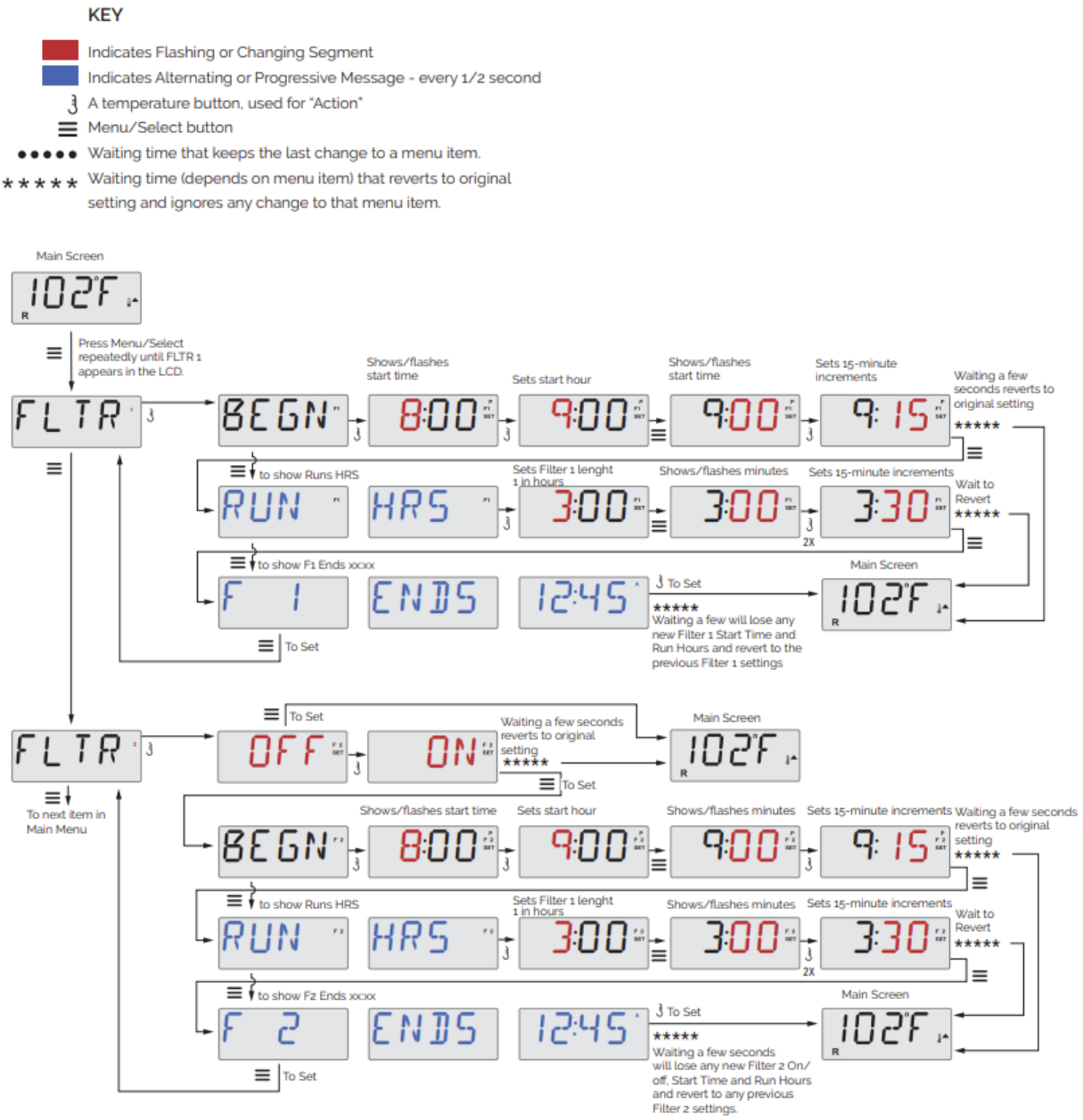

Filter Cycle 2 – Optional Filtration
Filter Cycle 2 is OFF by default. It is possible to overlap Filter Cycle 1 and Filter Cycle 2, which will shorten overall filtration by the overlap amount.

Purge Cycles
In order to maintain sanitary conditions, secondary Pumps and/or a Blower will purge water from their respective plumbing by running briefly at the beginning of each filter cycle.
If Filter Cycle 1 is set for 24 hours, enabling Filter Cycle 2 will initiate a purge when Filter Cycle 2 is programmed to begin.

5.3.2. Control system for TP600

Fill the spa to its correct operating level. Be sure to open all valves and jets in the plumbing system before filling to allow as much air as possible to escape from the plumbing and the control system during the filling process.

After turning the power on at the main power panel, the top-side panel display will go through specific sequences. These sequences are normal and display a variety of information regarding the configuration of the hot tub control.

PRIMING MODE – M019 | TP600

This mode will last for 4-5 minutes, or you can manually exit the priming mode after the pump(s) have primed.

Regardless of whether the priming mode ends automatically, or you manually exit the priming mode, the system will automatically return to normal heating and filtering at the end of the priming mode. During the priming mode, the heater is disabled to allow the priming process to be completed without the possibility of energizing the heater under low-flow or no-flow conditions. Nothing comes on automatically, but the pump(s) can be energized by pushing the “Jet” buttons. If the spa has a Circ Pump, it can be activated by pressing the “Light” button during Priming Mode.

PRIMING THE PUMPS | TP600

As soon as the above display appears on the panel, push the “Jet” button once to start Pump 1 in low-speed and then again to switch to high-speed. Also, push the Pump 2 or “Aux” button, if you have a 2nd pump, to turn it on. The pumps will now be running in highspeed to facilitate priming. If the pumps have not primed after 2 minutes, and water is not flowing from the jets in the spa, do not allow the pumps to continue to run. Turn off the pumps and repeat the process.
Note: Turning the power off and back on again will initiate a new pump priming session. Sometimes momentarily turning the pump off and on will help it to prime. Do not do this more than 5 times. If the pump(s) will not prime, shut off the power to the spa and call for service.
Important: A pump should not be allowed to run without priming for more than 2 minutes. Under NO circumstances should a pump be allowed to run without priming beyond the end of the 4–5-minute priming mode. Doing so may cause damage to the pump and cause the system to energize the heater and go into an overheat condition.

EXISTING PRIMING MODE | TP600

You can manually exit Priming Mode by pressing a “Temp” button (Up or Down). Note that if you do not manually exit the priming mode as described above, the priming mode will be automatically terminated after 4-5 minutes. Be sure that the pump(s) have been primed by this time.
Once the system has exited Priming Mode, the top-side panel will momentarily display the set temperature, but the display will not show the temperature yet, as shown below. This is because the system requires approximately 1 minute of water flowing through the heater to determine the water temperature and display it.

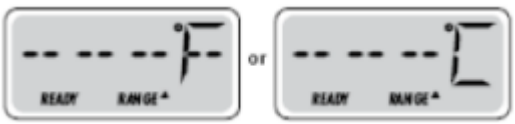

SPA BEHAVIOUR | TP600

Pumps

Press the “Jets 1” button once to turn pump 1 on or off, and to shift between low- and high-speeds if equipped. If left running, the pump will turn off after a time-out period. The pump 1 low speed will time out after 30 minutes. The high-speed will time out after 15 minutes.
On non-circ systems, the low speed of pump 1 runs when the blower or any other pump is on. If the spa is in Ready Mode, Pump 1 low may also activate for at least 1 minute every 30 minutes to detect the spa temperature (polling) and then to heat to the set temperature if needed. When the low speed turns on automatically, it cannot be deactivated from the panel, however the high speed may be started. If the system is equipped with a circ pump, it will be configured to work in one of three
different ways:

1. The circ pump operates continuously (24 hours) apart from turning off for 30 minutes at a time when the water temperature reaches 3°F (1.5°C) above the set temperature (most likely to happen in very hot climates).
2. The circ pump stays on continuously, regardless of water temperature.
3. A programmable circ pump will come on when the system is checking temperature (polling), during filter cycles, during freeze conditions, or when another pump is on. This specific circulation mode that is used has been determined by the Manufacturer and cannot be changed in the field.

Filtration and Ozone
On non-circ systems, Pump 1 low and the ozone generator will run during filtration. On circ systems, the ozone will run with the circ pump. The system is factory-programmed with one filter cycle that will run in the evening (assuming the time-of-day is properly set) when energy rates are often lower. The filter time and duration are programmable. A second filter cycle can be enabled as needed. At the start of each filter cycle, the blower (if there is one) or Pump 2 (if there is one) will run briefly to purge its plumbing to maintain good water quality.

Freeze Protection
If the temperature sensors within the heater detect a low enough temperature, then the pump(s) and the blower automatically activate to provide freeze protection. The pump(s) and blower will run either continuously or periodically depending on conditions.

In colder climates, an optional additional freeze sensor may be added to protect against freeze conditions that may not be sensed by the standard sensors. Auxiliary freeze sensor protection acts similarly except with the temperature thresholds determined by the switch. See your dealer for details.

TEMPERATURE AND TEMP RANGE | TP600

Adjusting the Set Temperature
When using a panel with Up and Down buttons (Temperature buttons), pressing Up or Down will cause the temperature to flash. Pressing a temperature button again will adjust the set temperature in the direction indicated on the button. When the LCD stops flashing, the spa will heat to the new set temperature when required.
If the panel has a single temperature button, pressing the button will cause the temperature to flash. Pressing the button again will cause the temperature to change in one direction (e.g. UP). After allowing the display to stop flashing, pressing the Temperature Button will cause the temperature to flash and the next press will change the temperature in the opposite direction (e.g. DOWN).

Press-and-Hold
If a Temperature button is pressed and held when the temperature is flashing, the temperature will continue to change until the button is released. If only one temperature button is available and the limit of the Temperature Range is reached when the button is being held, the progression will reverse direction.

Dual Temperature Ranges
This system incorporates two temperature range settings with independent set temperatures. The High Range designated in the display by an “up” arrow, and the Low Range designated in the display by a “down” arrow.
These ranges can be used for various reasons, with a common use being a “ready to use” setting vs. a “vacation” setting. The Ranges are chosen using the menu structure below. Each range maintains its own set temperature as programmed by the user. This way, when a range is chosen, the spa will heat to the set temperature associated with that range. For example:

High Range might be set between 80°F and 104°F

Low Range might be set between 50°F and 99°F

More specific Temp Ranges may be determined by the Manufacturer

Freeze Protection is active in either range

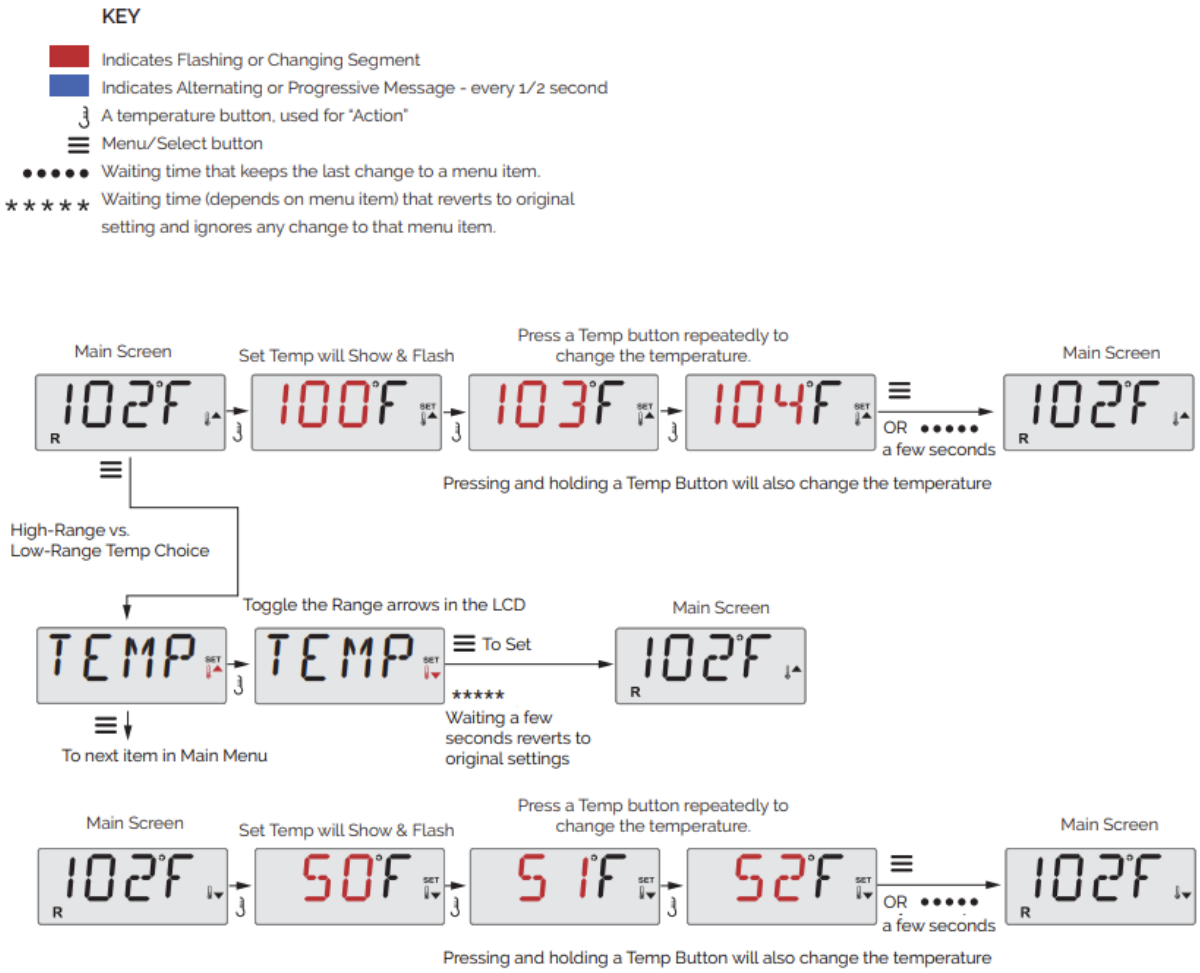

MODE – READY AND REST | TP600

In order to heat, a pump needs to circulate water through the heater. The pump that performs this function is known as the “heater pump.”
The heater pump can be either a 2-Speed Pump 1 or a circulation pump. If the heater pump is a 2-Speed Pump 1, READY Mode will circulate water periodically, using Pump 1 Low, to maintain a constant water temperature, heat as needed, and refresh the temperature display. This is known as “polling.”

REST Mode will only allow heating during programmed filter cycles. Since polling does not occur, the temperature display may not show a current temperature until the heater pump has been running for a minute or two.
If the spa is configured for 24HR circulation, the heater pump generally runs continuously. Since the heater pump is always running, the spa will maintain set temperature and heat as needed in Ready Mode, without polling.
In Rest Mode, the spa will only heat to set temperature during programmed filter times, even though the water is being filtered constantly when in circulation mode.

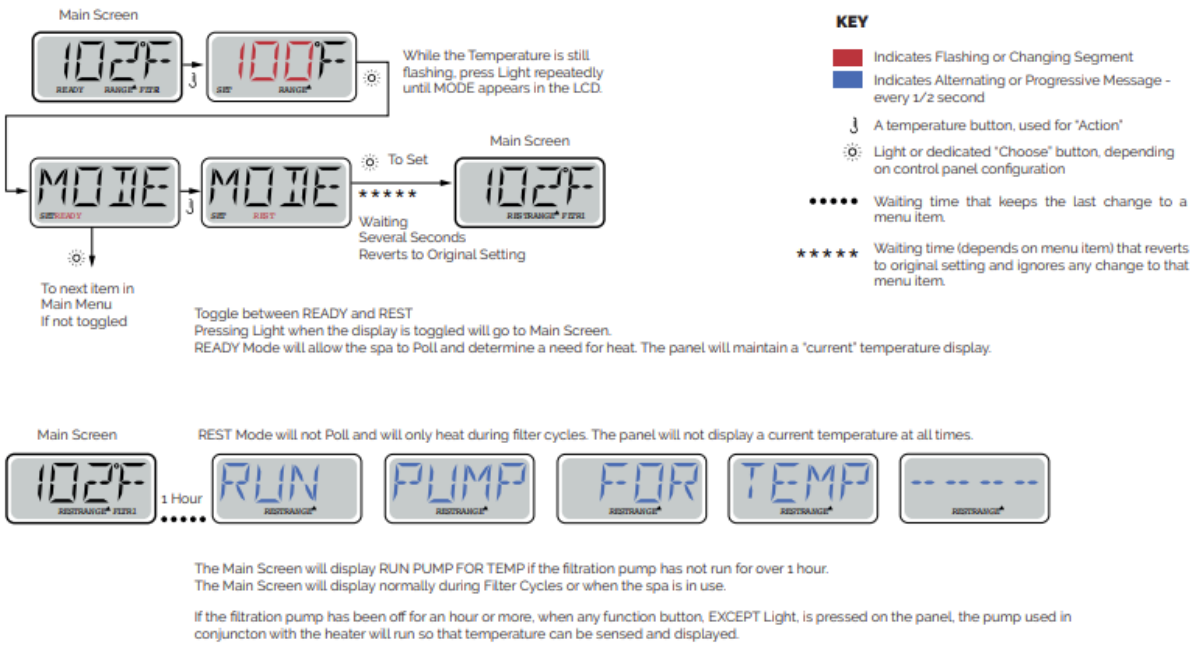

Ready-in-Rest Mode
READY/REST appears in the display if the spa is in Rest Mode and Jet 1 is pressed. It is assumed that the spa is being used and will heat to set temperature. While Pump 1 High can be turned on and off, Pump 1 Low will run until set temperature is reached, or 1 hour has passed. After 1 hour, the System will revert to Rest Mode. This mode can also be reset by entering the Mode Menu and changing the Mode.

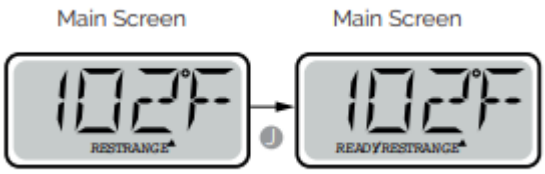

ADJUSTING FILTRATION | TP600

Filter cycles are set using a start time and a duration. Start time is indicated by an “A” or “P” in the bottom right corner of the display. Duration has no “A” or “P” indication. Each setting can be adjusted in 15-minute increments. The panel calculates the end time and displays it automatically.

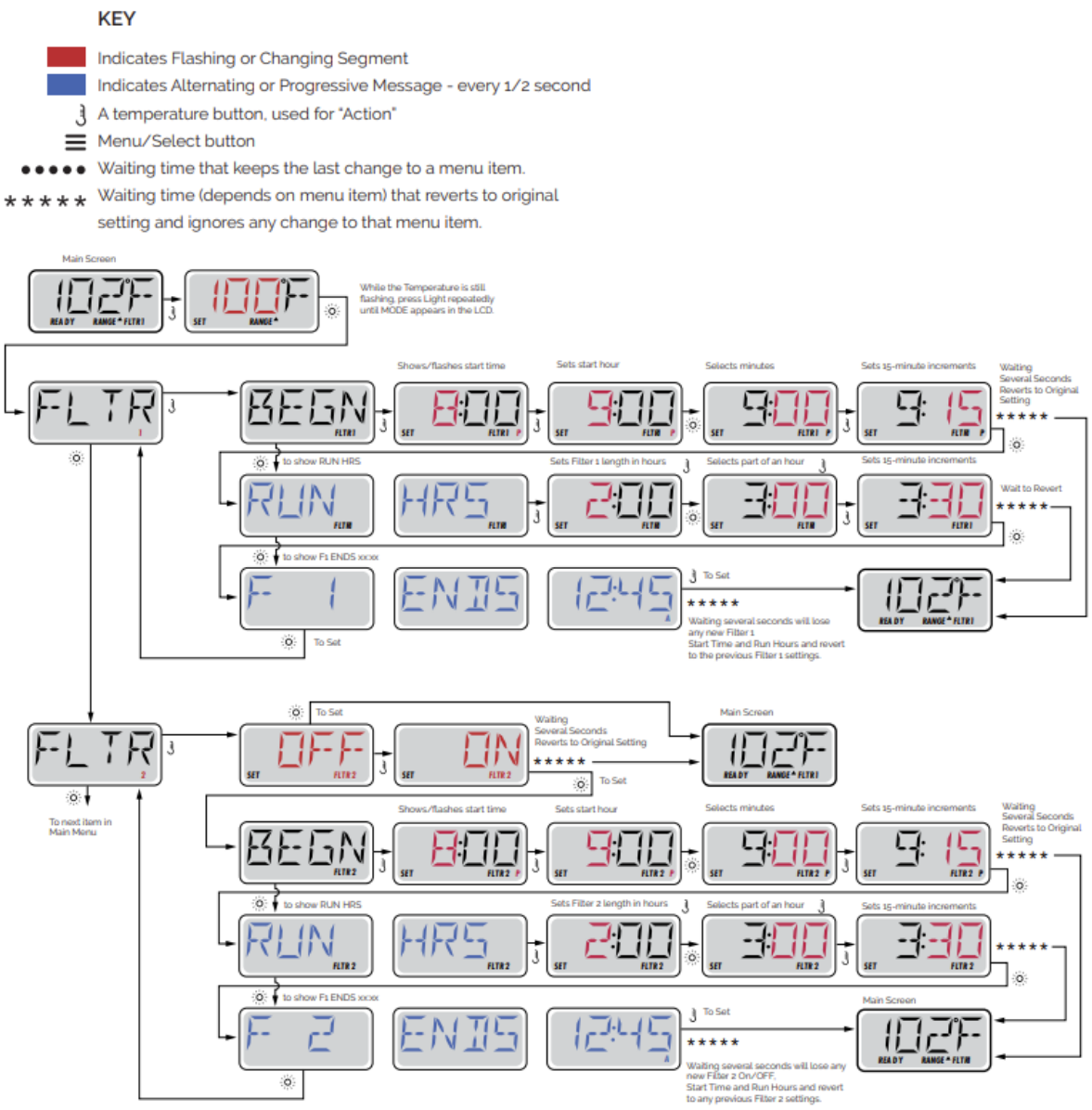

Filter Cycle 2 – Optional Filtration

Filter Cycle 2 is OFF by default. It is possible to overlap Filter Cycle 1 and Filter Cycle 2, which will shorten overall filtration by the overlap amount.

Purge Cycles

To maintain sanitary conditions, secondary Pumps and/ or a Blower will purge water from their respective plumbing by running briefly at the beginning of each filter cycle.

If Filter Cycle 1 is set for 24 hours, enabling Filter Cycle 2 will initiate a purge when Filter Cycle 2 is programmed to begin.

5.3.3. Control system for Touch Panel

MAIN SCREEN | TOUCH PANEL

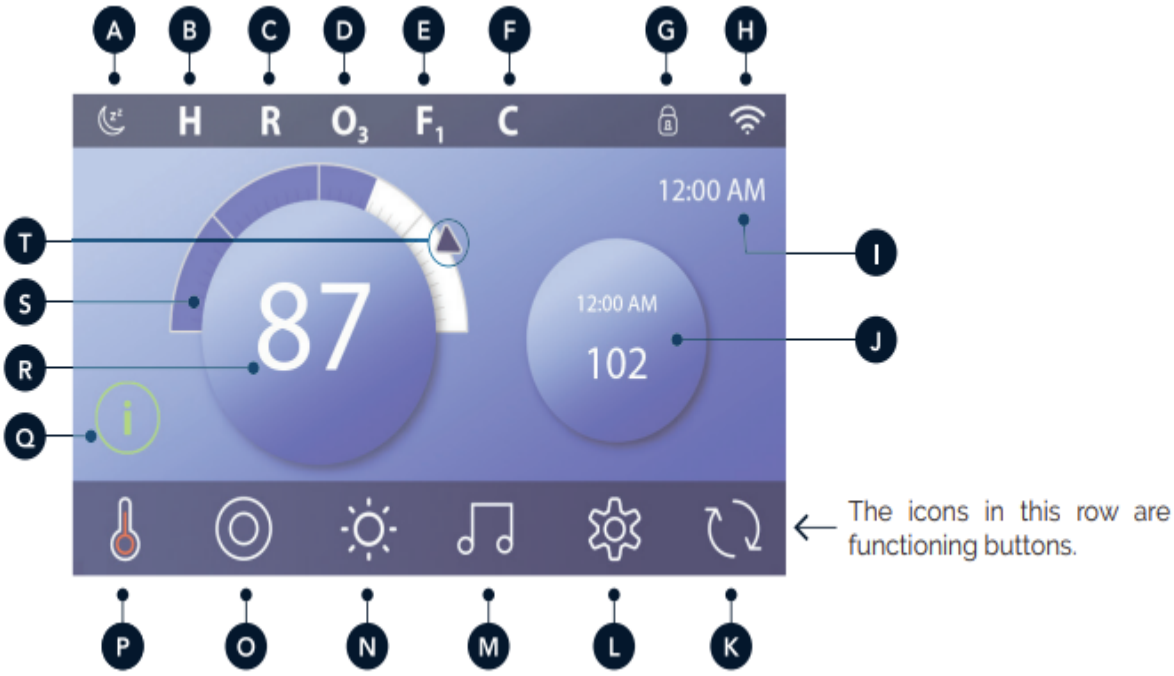

A - Panel Sleep

B - Temperature Range

High: **H**

Low: **L**

C - Heat Mode

Ready: **R**

Rest: **R̲**

Ready-in-Rest: **RR**

D - Ozone Runing: **O_3**

E - Filter Cycles

Filter Cycle 1 : **F_1**

Filter Cycle 2 : **F_2** (OPTIONAL FEATURE)

Filter Cycle 1 & 2 : **F+**

F - Cleanup cycle (OPTIONAL FEATURE)

G - Panel Locked and/or Settings Locked

H - WiFi (Local or Cloud connection)

I - Time-of-Day

J - Secondary Button/Display

K - Invert Display

L - Settings

M - bba™ versions 2 and 3 (Balboa Bluetooth Audio)

N - Light (or CHROMAZONE ™ if installed). Both icons change from white to color when these devices are powered On.

O - Spa

P - Heater Status

Q - Message Button (May Appear)

Information: (i)

Reminder: (R)

Error - Normal Error or Warning: ⚠

Error - Spa will not function until fixed: ⚠

R - Water Temperature

S - Water Temperature Bar

T - Set Temperature Arrow

WAKE UP THE PANEL, NAVIGATION & COMMON BUTTONS | TOUCH PANEL

Controlling your spa is easy with the intuitive graphical user interface (GUI). This section describes how to navigate and use the GUI.

Wake Up the Panel

The screen is blank when it is in sleep mode. When you touch the blank screen, one of three screens will appear:

1- The Main screen will appear (A3). The panel is awake.

2- The ① icon will appear (A2). Wake up the panel by pressing the ② icon and then the icon.

3- The hand icon will appear. Wake up the panel by pressing the hand icon (A1) and then swiping in the direction of the arrows.

The panel automatically goes into sleep mode when it is not used for a specified duration. The duration can be adjusted.

Buttons

A variety of button styles provide quick access to functions and settings. The large temperature display is a button (B) that controls the Set Temperature. The whole bottom row of the Main screen contains buttons (C).

Mini Player Button (Set Temperature/Time)

The Mini Player button gives fast access to the Set Temperature and time (D). Show or hide the Mini Player button by pressing the Heater Status button once (E).

Mini Player Button (Music)
The Mini Player displays music controls (F) if your spa is equipped with bbaTM (Balboa Bluetooth Audio) and it is activated. Hide the Mini Player button by pressing the Heater Status button twice (G). The first press displays the Set Temperature/Time Mini Player button. The second press hides the Mini Player button.

bbaTM button (H)
If bbaTM is activated, pressing the bbaTM button (H) once displays the Mini Player (F) with music controls. Pressing the bbaTM button (H) a second time opens the Music screen (I) , If bbaTM is activated, a white ring appears around the button, as shown here (I).
If bbaTM is not activated, pressing the bbaTM button (H) once opens the Music screen (I).
If your spa is equipped with bbaTM, refer to the bbaTM user guide that came with the spa. If a user guide was not included, please contact the spa dealer or spa manufacturer.

Screen Names
Screen names appear in the top row of the screen. For example, this is the Settings screen (J). Screen names are referenced throughout this user guide.

Navigation
Navigate screens and/or lists with the following buttons:

Swiping & Selecting Items in Lists
Swipe a list (N) to find the setting you want. The list will have an arrow (M) that indicates the current setting. If your desired setting appears but is not aligned with the arrow, tap the desired setting to make it align with the arrow. The temperature list will disappear when you tape anywhere outside of it.

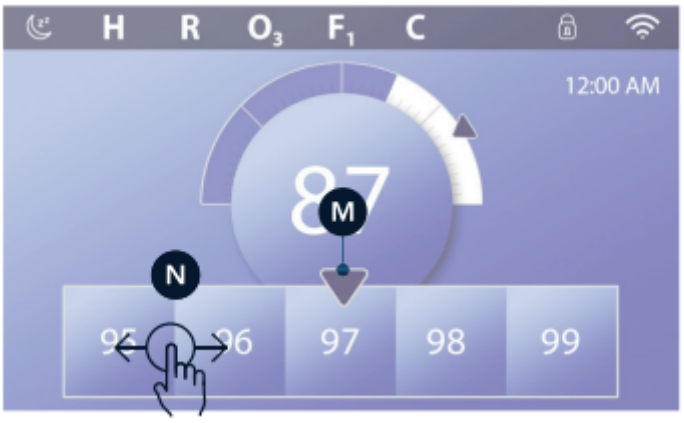

Saving & Cancelling
After you input a new setting, press the Save button (B). After you press Save, the change is

complete. If you don’t want to apply a new setting, press the Cancel button (A).

Message Buttons

Message buttons provide reminders to help you keep your spa running smoothly. Message buttons also provide warning information that helps spa technicians with troubleshooting.
When a message button appears (C), press it to view the corresponding message (D) or (G).
Press the Exit button (E) to go back to the Main screen or press the Clear button (F) to dismiss the message

Buttons vary depending on the type of message. View the list below.

Information Message

Error-Spa will not function until fixed

Reminder Message

Clear Button

Error - Normal Error or Warning

Exit Button

SETTINGS SCREEN | TOUCH PANEL

Fine tune your spa with a wide variety of Seetings.

Starting from the Main screen, press the Settings button to view the Settings screen (A).
Press the navigation arrows or swipe to view all of the Settings screens.

HEAT
Make sure your spa is heated and ready to enjoy with Heat Settings.
FILTER
Keep your spa water clean and ready to enjoy by setting Filter Cycles.
TIME
Set the Time to insure scheduled freatures have proper timing.
REMINDERS
Reminders (A) are helpful spa maintenance messages that display periodically.
LOCKS
Lock the Panel and/or Setting.
LIGHT CYCLE (Optional)
If you want the spa lights to turn On and Off at a specific times, use Light Cycle (A).
HOLD
Hold (B) is used to disable the pumps during service functions like cleaning or replacing the filter. Hold Mode will last for 1 hour unless the mode is exited manually. If spa service will require more than an hour, it may be best to simply shut down power to the spa.
The Hold Icon on the Settings Screen places the spa in Hold Mode and displays the System Hold screen. Touch Back to exit Hold Mode

A

B

HOLD (continued)
Drain Mode (Optional)
Some spas have a special feature that allows Pump 1 to be employed when draining the water. When available, this feature is a component of Hold.
CLEANUP
When a pump or blower is turned on by a button press, a clean-up cycle begins 30 minutes after the pump or blower is turned off or times out. The pump and the ozone generator will run for 30 minutes or more, depending on the system. On some systems, you can change this setting.
UNITS
Specify Time and Temperature Units (B). The temperature choices are Fahrenheit or Celsius. The time display choices are 12 hour or 24 hour.
LANGUAGE
Select from a variety of languages.
PANEL
You can change two options on the Panel screen:
1 - Set how long it takes the panel to go to sleep after the last activity. Short times are recommended because it decreases the chance of water activating buttons.
2 - Set whether or not you need to do an extra action to wake the panel (see page 6). The purpose of the extra action to wake the panel is to make it very unlikely that water can wake the panel.
CHROMAZON? TM (continued)
If your spa is equipped with CHROMAZON? TM, refer to the CHROMAZON? TM user guide that came with the pa If a user guide was not included, please contact he spa dealer or manufacturer.
DIAGNOSTICS
Spa technicians can find useful information and features in Diagnostics (C).

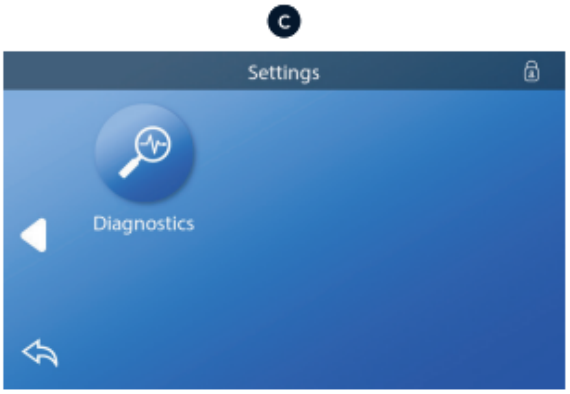

5.4. Jets operation

The water jets provide a hydrotherapy pressure jet. It is a closed circuit, where the water is absorbed by 1 or 2 pumps (depending on the SPA model) through the drain and driven to the jets.

The hydromassage effect is provided by the jet, when the circuit water mixes with the outside air, in the so-called Venturi effect.

To adjust the amount of air driven into the jets, simply turn the air input tab (venturis) as follows.

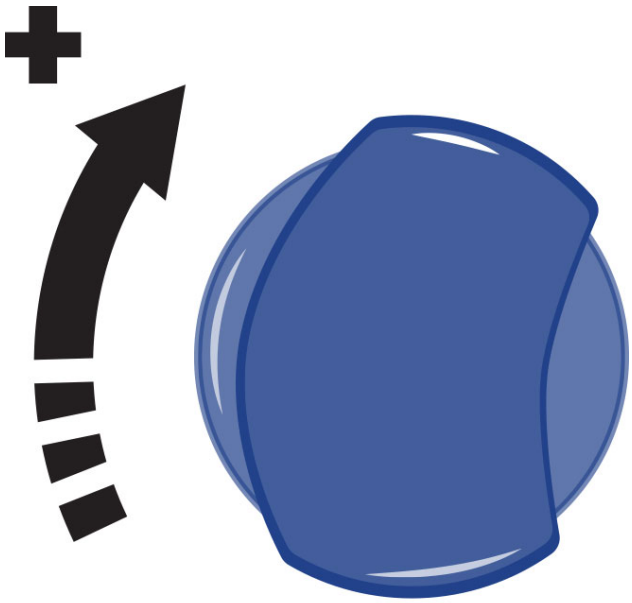

Each air inlet activates a certain group of jets.

Some jets can also adjust the flow intensity on opening and closing the water flow. To do this, proceed as follows:

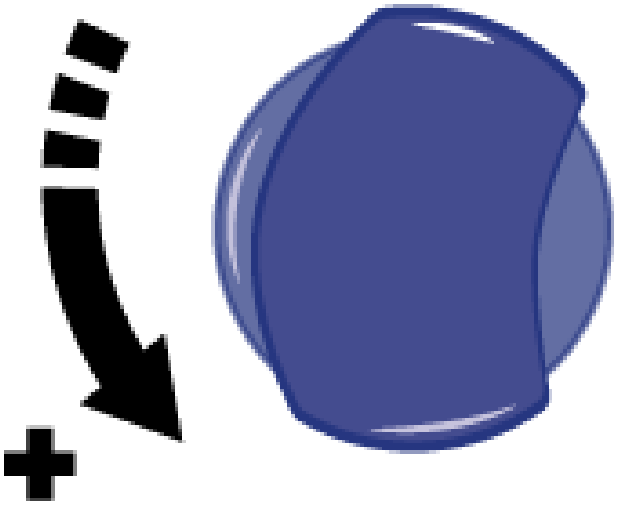

ATTENTION
Do not attempt to turn the outer ring of the jet, forcing it because you could damage it.

5.5. Swimspa controls

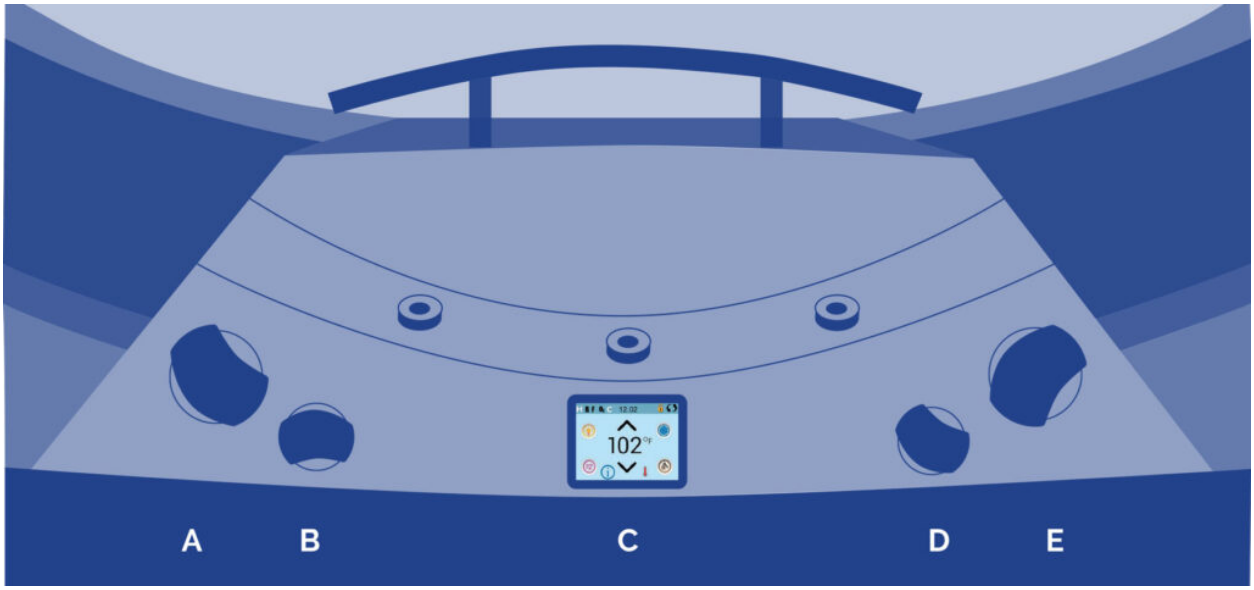

A - Jetstream control

With the jetstream control you can choose the power of the bottom jetstream and the massage.

B – Fountains control

Turning the fountains control you can regulate the flow of the three fountain jets. The fountain only runs when the filtration circuit is running or the spa is in heating process.

C – Main control panel

With the electronic main control panel you can turn on or turn off the Jets, Blower (optional) and Light, set the Temperature, the filtration cycles and Time.

D – Air control

With the air input valve you can adjust the air turbulence of the jetstream.

E – Jetstream control

With the jetstream control you can choose the power of the top jetstream and the massage.

5.6. Renewing the spa water

To change the Spa water:

• Disconnect the electrical equipment, placing the differential switch (installed in the main input of the home) in the OFF position.

• Locate the drain valve (see 3.3 Drainage) and turn the valve to the OPEN position. The Spa will empty by gravity through the general drain.

• Once the Spa is empty, inspect the acrylic and clean if necessary (see point 6.5 Acrylic Maintenance). Turn the drain valve to the CLOSED position.

• Fill the Spa with clean water (see 3.4 Filling the spa)

5.7. Extras

AROMATHERAPY

The AROMATHERAPY system gives customers a whole host of new sensations by introducing any aroma chosen through the air massage circuit.

The AROMATHERAPY system does not generate any waste products in the water, as happens with conventional oils, which dirty the water and can cause unpleasant effects, as well as blocking up the filter.

The way it works is straightforward and it is easy to maintain. Just place one of the AROMATHERAPY refills into the dispenser on the spa’s outer surface and, when the lid is closed, switch the air circuit on.

This system does not work with any kind of refill (no liquids can be added). Only those that appear in catalogue may be used.

Note: Do not leave the lid of the aroma dispenser off. water or another liquid could get into it and damage the air pump.

AUDIO

For cleaning the stereo and speakers, avoid cleaning with high pressure water, such as high pressure washing or with the hose nozzle.

The system consists of a subwoofer as well as two speakers strategically located in the cabinet. With this system, you can connect your mobile devices to the Spa.Sincronizar con el dispositivo Bluetooth.

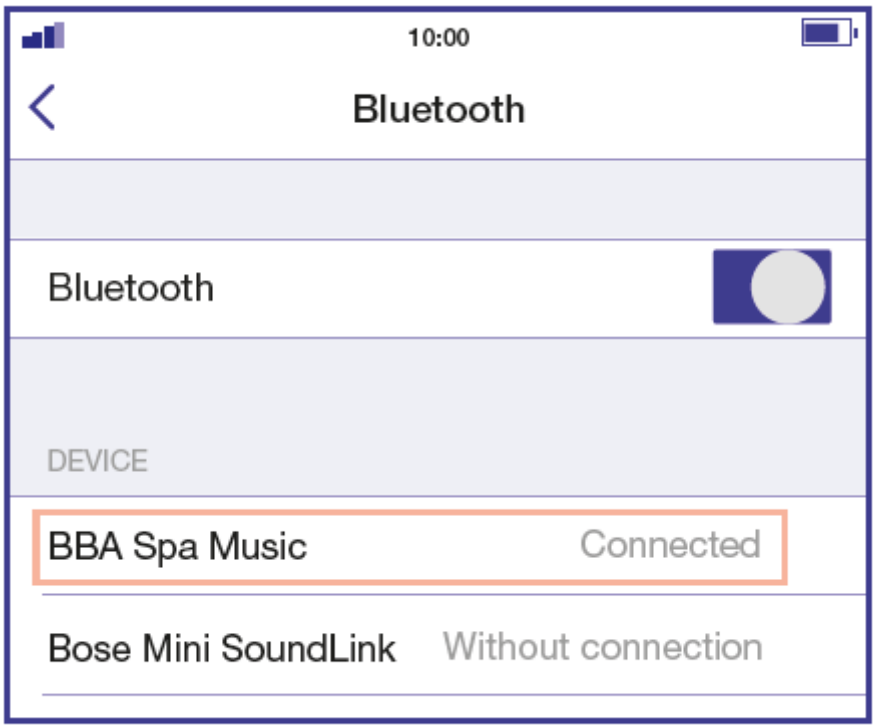

1. Open Bluetooth device.

2. Select ‘BBA Spa Music’ from the list of devices available to pair (no password required).

BLUETOOTH SURROUND SOUND

The system is equipped with a subwoofer (subwoofer) and four speakers. Use the Bluetooth function to connect the sound system to your tablet or smartphone. In addition, you can listen to your favorite AM / FM radio stations and connect an auxiliary input cable or USB flash drive. The LED display will tell you what is playing.

Bluetooth operation

BLUETOOTH CONNECTION

Audio Equipment

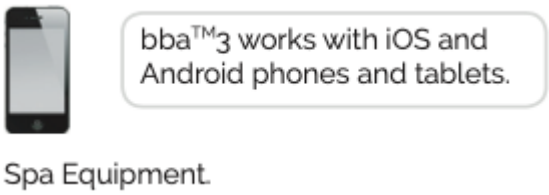

Built in power supply: The bbaTM3 connects to the control system at the circuit board connector labeles “A/V”

1. Power on the system pack with bbaTM3 already connected to the system pack.

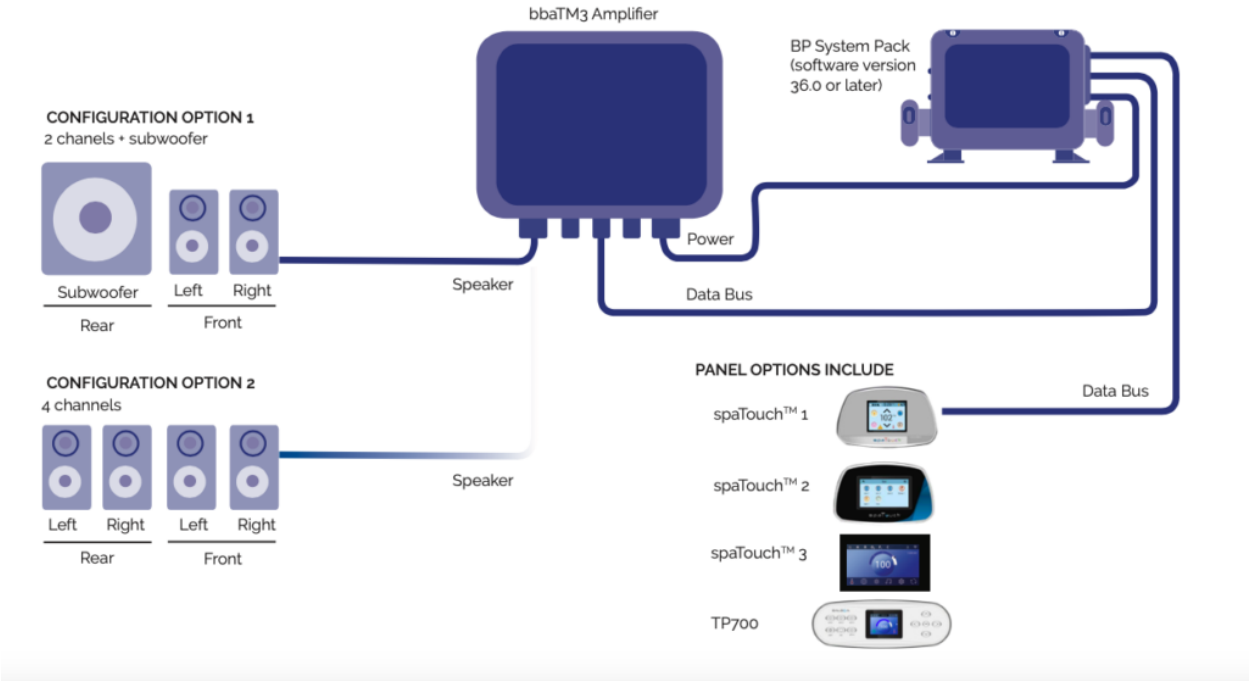

2. On the top panel press the music button. Then the power button.

3 - Turn on Bluetooth function of your smart device or music device.

4 - On your smart device or music device, click Search for Bluetooth device. Make sure you are close enough to the spa.

5 - Select “PPME70BT” in the pairing list.

6 - Click on «Connect». Once connected, you can now play your favorite music from your smart device or music device.cbba2 operates up to 100 feet in open air. Ranges vary as they are dependant on installations.

NOTE: If this message appears, it means that the equipment is NOT connected to the Bluetooth of the mobile device.

Open / Close button Audio

Indicator to active bluetooth

Configurations

Silence Audio

FITNESS KIT

BENEFITS
Swimming with the FITNESS KIT helps build strength and burn calories, giving you the same benefit as lap swimming. In just minutes a day, you can be on your way to having a dynamic cardiovascular workout, a fit body with firm, toned muscles.

PROPER USE

To clarify the proper use of the FITNESS KIT is necessary to follow some methods that will “guarantee” that your product will be used properly and will eliminate any possibility of breakage or rod failure. These units are specifically engineered to provide “resistance technique and aerobic exercise in water”, not a land/dry based swim system.

Notes:
1. Do not “OVER STRETCH” cord more than 50% of its original length!
2. Do not jump off side of spa/pool with belt/tether attached.
3. Do not push off side the spa/pool, start swimming once you are in pool and sack is out of latex cord.

SWIMMING RECOMMENDATIONS:

1. You can swim “slowly to moderate” and accomplish maximum aerobic strength and conditioning without swimming hard.

2. Do not try to reach the other side of your spa/pool, failure may occur. These units are made for resistance, “LET THE WATER DO THE WORK”.

3. When swimming any one of 4 strokes, fins a rhythm in your stroke where you fluctuate forward and backwards; but basically stay in a defined swim space.

CARE INSTRUCTIONS

1. Rinse FITNESS KIT with fresh water after every use.

2. STORE IN A COOL, DRY PLACE WHEN NOT IN USE to avoid excessive damage from the elements. Prolonged exposure to UV rays may have adverse effects on some of the components. It’s best to store all components in the provided bag. 3. Inspect your FITNESS KIT before each use. DO NOT USE if there are any visible signs of damage or excessive wear and tear. DON’T RISK IT.

ACCESSORIES

Arm Exercise Handles

Leg Exercise Straps

Exercise Bundles

ROW-EXERCISE

To shorten cords on tether cord and row-exercise kits follow these instructions:

1. Cord is attached with four (4) components, hook, ball, collar & cord/tubing.

2. To shorten cord/tubing twist off the HOOK portion of the connections by turning counter-clockwise.

3. Hold collar with hand or pliers and push/squeeze cord/tubing outwards away from collar.

4. Remove the ball by squeezing outwards towards end of card/tubing.

5. Cut off length of cord/tubing desired and reinsert ball 1,3cm back into cord/tubing and pull back into collar.

6. Reconnect hooks by turning clockwise until tight. Function is complete!

RECOMMENDED FITNESS KIT CORD FIXATION Fix the cord on the spa/pool as detailed below.

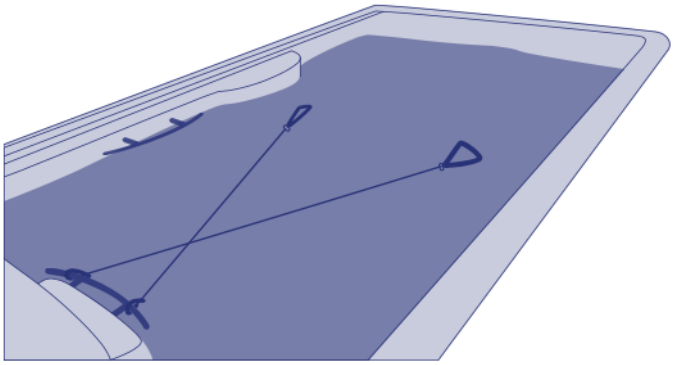

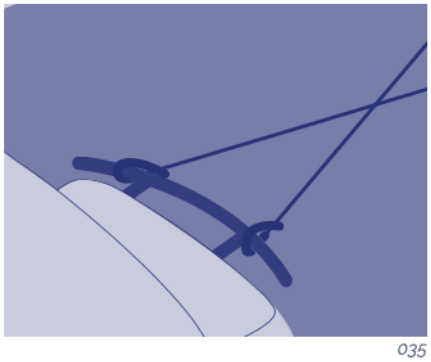

6. Maintenance

The Spas are built with maximum quality and with the hardest wearing materials available. Proper care and maintenance will ensure a long life-span of the Spa and its components

6.1. Warnings

- Before carrying out any electrical or mechanical maintenance work, make sure that the machine is disconnected from the mains, and that the start-up devices are blocked.
- Do not handle the equipment with wet feet.
- Before carrying out any work on the Spa, it should be switched off from the electrical supply (differential in the OFF position, or disconnect the mains cable).
- Remember that this equipment can not be connected to a normal plug.
- This equipment requires suitable electrical installation. This should be performed by a qualified person following the electrical safety standards of each country.
- The electrical supply of the Spa should always be protected by a highly sensitive differential. A 30 mA differential is recommended.
- Earth connection is essential. The earthing circuit of the building should always be in perfect condition to guarantee the safety of the Spa user. If you have any doubts on this, ensure that the earth circuit is checked by a qualified person. The manufacturer is not responsible for possible damage caused by unsuitable maintenance of the earth circuit.
- Do not connect the electrical equipment (differential in the ON position), if the Spa is empty of water.
- Use a cable of a section suitable to the power of the Spa and the distance to the panel.
- Always observe the instructions included in Safety Warnings chapter of this manual.
- Never try to access an electrical component unless you are qualified or are the Head of Maintenance.
- Never handle electrical elements with wet feet.
- Means must be incorporated to disconnect the spa from the electrical network as part of the fixed installation, according to the current regulations.

6.2. Water maintenance

The user must pay particular attention to the maintenance of water. Maintenance will depend on the mineral content of the water used, how often the Spa is used and how many people use the Spa.64

ANTI-FREEZE PROTECTION

If the temperature sensors detect a drop in temperature to below 6.7ºC, the heating element and filter pump will connect automatically to prevent the water from freezing and the damage this could cause the Spa.

The equipment will remain connected for 4 minutes after the temperature reaches 7.2ºC.

In colder climates, an additional temperature sensor can be added as a precaution and to avoid freezing conditions not detected by the standard sensor.

If the pump turns off in this situation, empty the Spa and contact your authorised dealer or Technical Assistance Service.

SAFETY IN THE USE OF CHEMICAL PRODUCTS

Before using a chemical product, read the instructions on the product label carefully.

It is advisable that always the same person handles the chemical products. Keep these products away from children.

Add the exact amounts to the water, as specified.

Keep containers tightly closed in dry, well-ventilated places.

Do not inhale chemical products, and take care not to let them come into contact with the eyes, nose or mouth. Wash hands after use.

Follow the emergency instructions on the product label in the event of an accident or ingestion.

Do not smoke while handling these products – they may be flammable.

Do not store these products inside the Spa unit.

Do not mix products. Add first one and then the other to the water, to avoid possible reactions.

Do not add chemical products to the water if there is someone in the Spa.

MAINTENANCE SCHEDULE OF THE SPA WATER

All chemical products: Bromine in tablet form, Algaecides, Anti-calcareous and pH reducer, must be added to a floating dispenser (not supplied), with the massage pump on for at least ten minutes.

pH ADJUSTMENT

A pH index of between 7.2 and 7.6 is recommended.

The pH level measures the acidity and alkalinity: Values above 7 are alkali and below 7, are acid.

ATTENTION

It is very important to maintain the correct pH level both for the disinfectant to work properly and to prevent corrosion or deposits on the Spa. Any damage caused by an inadequate pH level is not covered by your Spa guarantee.

The effects of a very low pH level are:

- The disinfectant will quickly dissipate.

- The equipment of the Spa become rusty.

- The water can start causing skin irritations to bathers.

• The effects of a very high pH level are:

- The disinfectant is less effective.

- Scale may appear on the acrylic and equipment.

- The water may become cloudy.

- The filter cartridge can become blocked.

Check the pH of the Spa water daily using the pH test set. (not supplied)

If the pH is above the indexes, use pH MINOR SPA. Wait for two hours and re-do the pH test.

If the pH is below indexes, use pH MAJOR SPA. Wait for two hours and re-do the pH test.

When the pH index has been adjusted to the values indicated above, proceed to the next step.

DISINFECTION OF THE WATER

Disinfection of the water is of utmost importance in order to destroy algae, bacteria and organisms that could develop in the water. However, excessive disinfection could cause skin and eye irritation.

BROMIDE TABLETS are a suitable disinfectant for the Spa water. This product is placed in the pre-filter and gradually dissolves.

Check the residual bromide level daily using the Br analyser set.

The recommended level of residual bromide is between 2.2 and 3.3 ppm.

USE OF SPECIAL PRODUCTS

Apart from products to maintain the pH and disinfectant level, there are other products formulated especially for use in Spas that will help you to maintain the water and installation in perfect condition.

PA-ANTI-CALCAREOUS: This prevents the precipitation of calcium salts (scale), particularly in hard water. This product should be added weekly and whenever the water is renewed.

SPA-ALGAECIDE: This algaecide prevents algae from growing in the Spa water. This

product is added weekly and whenever the water is renewed.

• SPA-ANTIFOAM: Foam is often formed owing to the agitation of the water and grease present in the water. Whenever there is a significant amount of foam, remove it with Spa-Antifoam.

• SPA-DEGREASER: To remove rings of dirt and grease that form on the walls of the Spa. To use this product, it is recommended to empty the Spa and apply a degreaser with a sponge on the parts to be cleaned. Rinse immediately with plenty of water.

OZONE GENERATOR

Ozone, O3, is an oxidising chemical component which is very effective in disinfecting water. Its main advantage is that it leaves no chemical residue and is odourless.

Its disinfectant properties are based on its oxidising potential, which leads to the elimination of any organic matter that there may be in the water.

In order to produce ozone, some Spas have an ozonator which, with electricity, can produce ions of ozone from atmospheric oxygen. This process occurs automatically, and the product generated is injected via the filtration return nozzles. Thus, it is not necessary for the user to activate any mechanism for its generation.

The water is collected by the overflow, the drains or the skimmer, due to the suction of the filter pump.

Then it passes through the heat exchanger and in its outlet it is injected with ozone. The water is distributed via the filtration return system.

Ozone treatment does not exclude the use of other chemical products such as Bromine or Chlorine.

The ozone is considered as a complementary process to the ones above, thus reducing the consumption of Bromine or Chlorine.

QUICK GUIDE TO THE APPLICATION OF CHEMICAL PRODUCTS

	Reason for Use	**Amounts per m3 of water**	**Frequency of use**
pH Minor Spa	Add if the pH level is above acceptable levels (7.2-7.6 ppm).	Add following recommendations of the chemical product manufacturer.	Analyse the pH daily with the pH Test.
pH Major Spa	Add if the pH level is below acceptable levels (7.2-7.6 ppm).	Add following recommendations of the chemical product manufacturer.	Analyse the pH daily with the pH Test.
Bromide tablets	Add if the Br level is below acceptable values (2,2-3,3 ppm).	Add following recommendations of the chemical product manufacturer.	Analyse the Br daily with the Br Test.

Anticalcareous	To prevent precipitation of calcium salts (scale).	Add following recommendations of the chemical product manufacturer.	Once a week and whenever the water is renewed.
Spa Algaecide	Prevents algae from growing in the water.	Add following recommendations of the chemical products manufacturer.	Once a week and whenever the water is renewed.
Degreaser	To eliminate rings of dirt on the walls of the Spa.	Rub with a sponge and immediately rinse with abundant water.	Whenever dirt is observed on the walls of the Spa.
Antifoam	Foam in the water.	Add following recommendations of the chemical product manufacturer.	Whenever foam appears in the water.

6.3. Filter maintenance

ATTENTION
It is advisable to periodically check the condition of the filter cartridge. If dirt is observed, it must be clean or replace it. Remember that a clogged filter produces a drop in the flow of water, can cause a malfunction of the Spa. The Spa should always operate with the pre filter and filter cartridge placed correctly. Never place objects that might clog the inlet of the filter.

All spas include a filter. Check the type of your spa filter and follow the instructions.

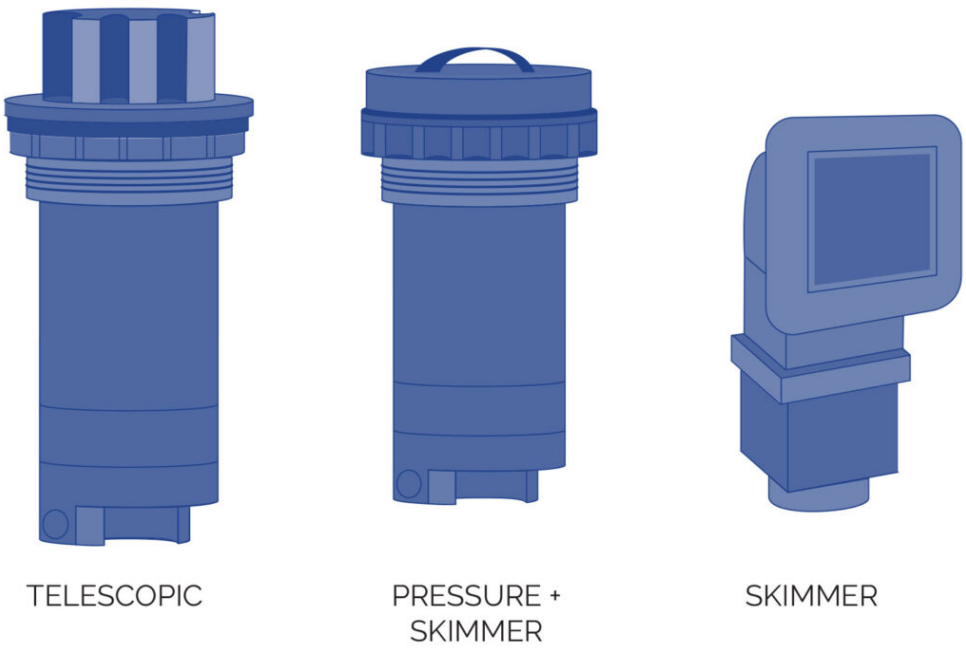

TELESCOPIC FILTER CLEANING

1. Disconnect the electrical equipment. Differential in OFF position.

2. Unscrew the top of the filter.

3. Remove the cartridge.

4. Clean the cartridge with water at low pressure.

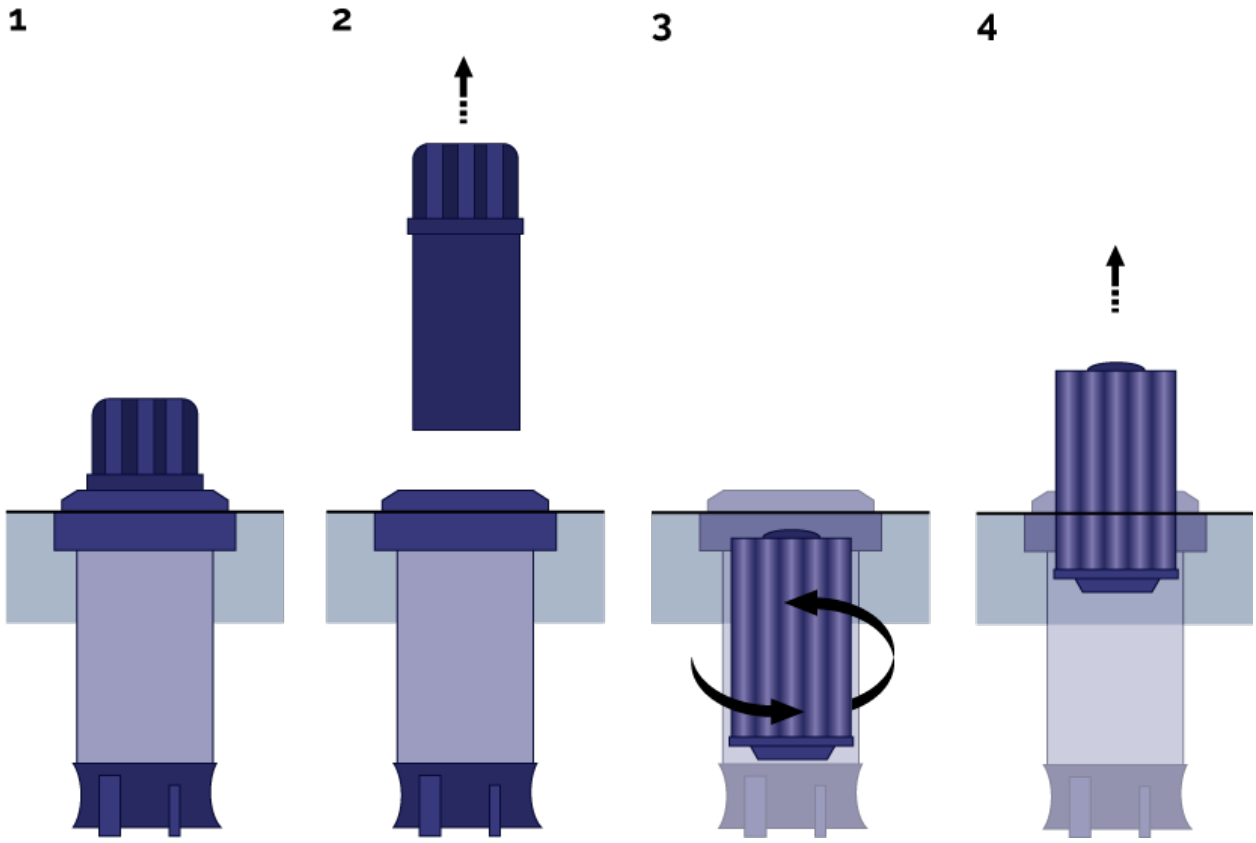

FILTER PRESSURE CLEANING

1. Disconnect the electrical equipment. Differential in OFF position

2. Unscrew the cap on top of the filter.

3. Release lock and unscrew the top of the filter.

4. Remove the cartridge.

5. Clean the cartridge with water at low pressure.

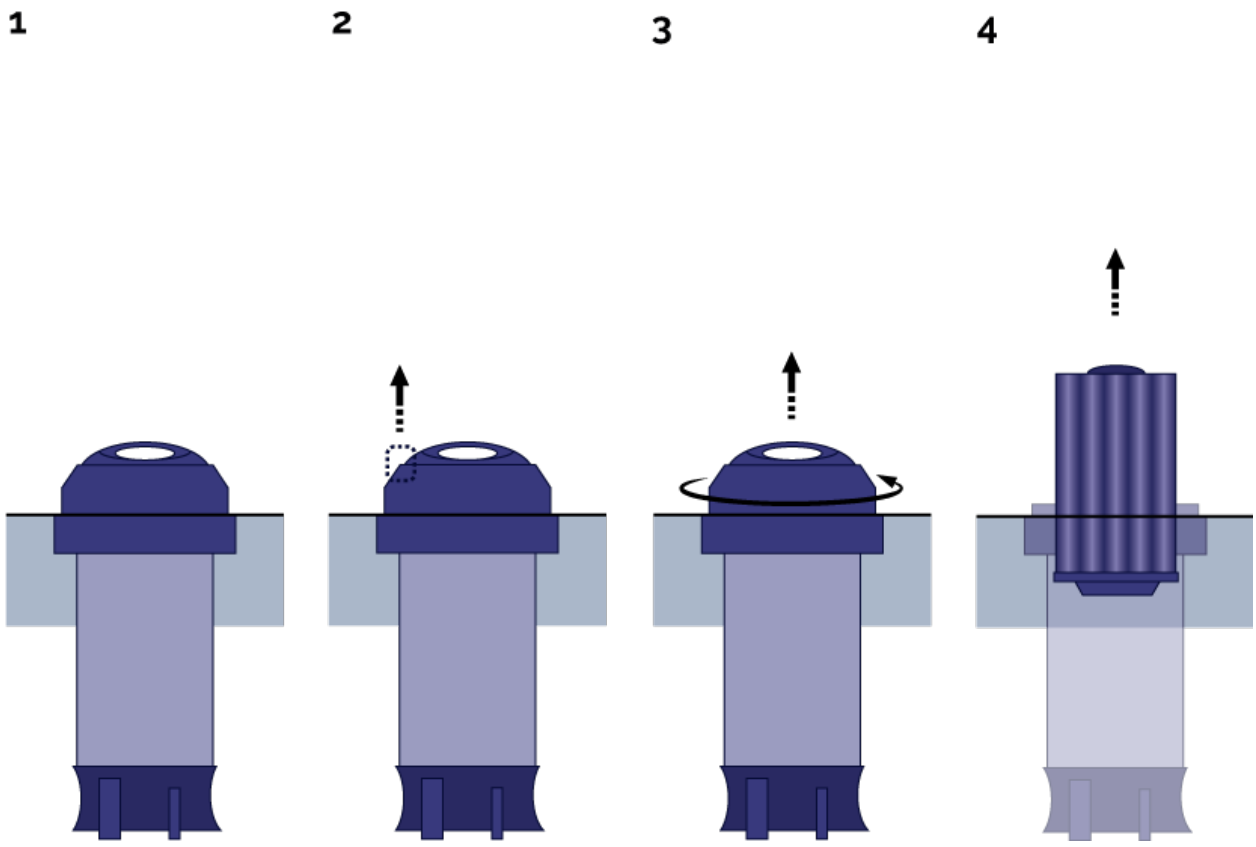

SKIMMER FILTER CLEANING

1. Disconnect the electrical equipment. Differential in OFF position.

2. Pull the top of the skimmer.

3. Remove the cartridge.

4. Clean the cartridge with water at low pressure.

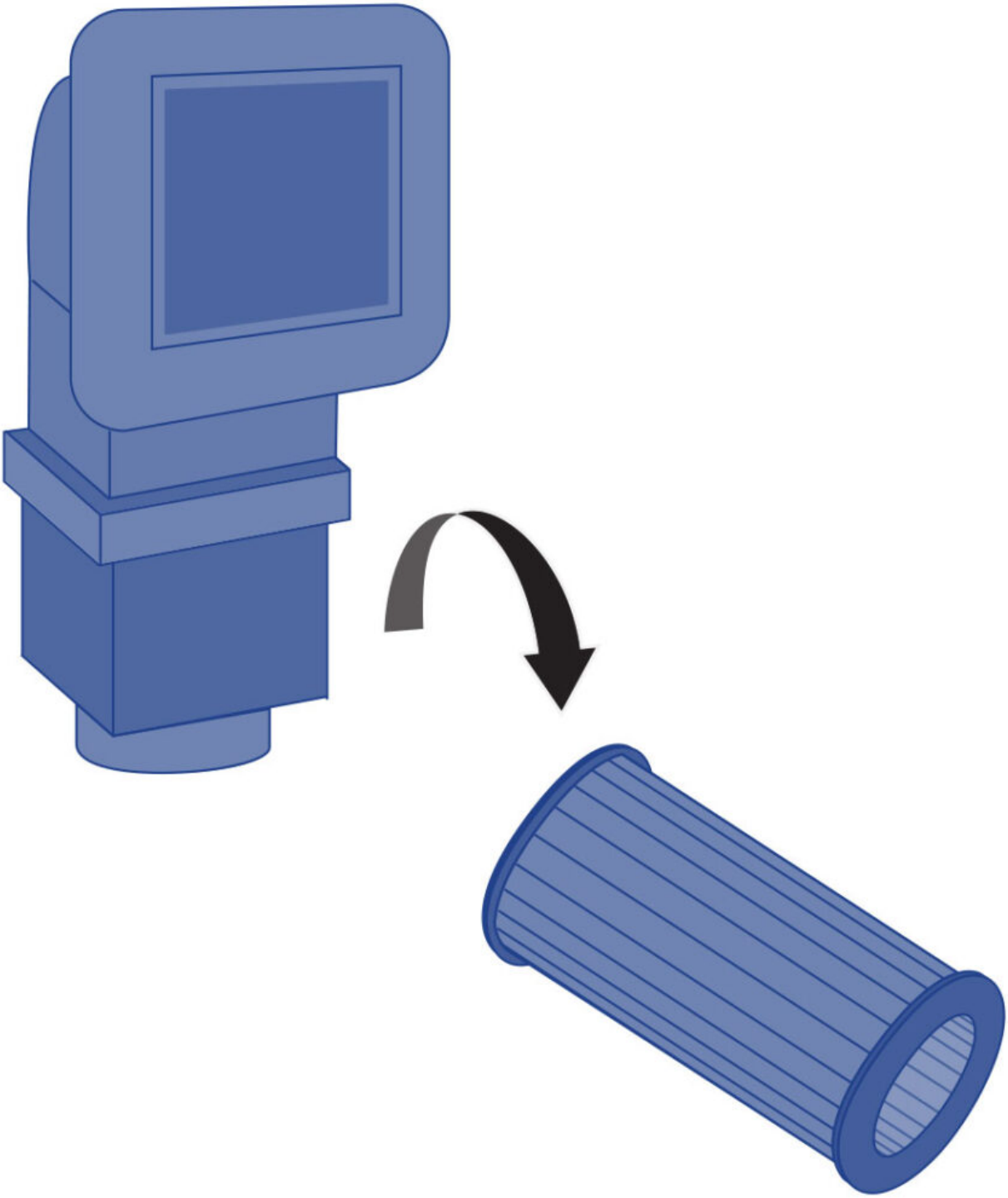

ATTENTION
Remember to follow all the steps and to close the valve in order not to damage the Spa or hurt yourself. ×

6.4. Pre-filter of the pump maintenance

It is recommended to periodically check the condition of the pre-filter of the pump to avoid it from blocking. If debris has accumulated, the pre-filter should be opened and cleaned.

Follow these steps to clean the pre-filter:

1. Turn off the Filtering Pump by placing the selector in the OFF position.

2. Close the valve of the filtering circuit that connects the pump to the Spa.

3. Using the key supplied with the equipment, turn the upper cover of the pre-filter anticlockwise until

it becomes loose. Remove the basket of the pre-filter to clean it.

4. Put the basket back into place. Place the joint of the cover to close it using the key.

5. Open the filtering circuit valve.

6.5. Acrylic maintenance

Easy care for an elegant surface:

- Use common cleaners for general use. For normal care and cleaning, use a soft cloth or sponge with a little soap and water. Rinse it well, and dry with a clean, dry cloth. If you are using a household cleaner, please ensure it is recommended for acrylic surfaces by the manufacturer.
- Never use abrasive cleaners.
- Do not allow the acrylic surface to come into contact with ketones or esters such as acetone, acetates (such as nail varnish remover, nail varnish or dry cleaning substances) or any organic solvent with chlorine, varnishes, petrol, aromatic solvents, etc.
- Remove dust, smears and dry dirt with a soft, moist cloth.
- Clean off grease, oil, paint and ink stains with isopropyl alcohol and dry it with a clean, dry cloth.
- Avoid using razors or any other kind of sharp instrument that could scratch the surface. Small scratches can be removed by applying a fine layer of automotive varnish and lightly polishing it with a clean cloth.

Once a week, clean the area of the Spa which is not underwater with a quality polish for Spas.

ATTENTION
Remember to never leave the Spa uncovered, empty and exposed to the sun, as it could cause damages that the warranty does not cover.

6.6. Light maintenance

Replacing the lamp is the only required maintenance on the spotlight. To replace the lamp, follow these steps:

- Dismantle the wooden side panel where the spotlight is installed using a medium-sized stecker screwdriver.
- To replace the lamp, turn the lamp-holder bushing anticlockwise and lift it from its position.
- Once the faulty lamp has been replaced, place the lamp-holder back in position and reassemble the wooden side panel of the Spa.

If you have any doubt about the explanation of this operation, contact your authorised dealer or authorised technical service.

WARNING- RISK OF ELECTRIC SHOCK
Make sure the power of the Spa is turned off.
The new lamp must have the same features as the lamp supplied.
Never install lamps without the front lens.
To ensure perfect watertightness, clean the mounting base of the flat gasket of the glass or replace it if you observe any dents or permanent damage.

6.7. Maintenance in periods of non-use or absence

SHORT PERIODS (3-5 days)

- Adjust the pH and treat the water (see Water Maintenance section)
- Cover the spa.
- Before using the Spa again, readjust the pH and treat the water again.

PROLONGED PERIODS (5-14 days)

- Set the temperature at its lowest level.
- Adjust the pH and treat the water (see Water Maintenance section).
- Cover the Spa.
- Before using the Spa again, reset the temperature as required, readjust the pH and treat the water again.

PREPARING FOR THE WINTER PERIOD

If it is not planned to use the Spa through the winter season or for prolonged periods of time, the following operations should be done:

- Disconnect the electrical equipment, placing the differential switch tab in the OFF position.
- Locate the drain valve (see Drainage of the Spa) and turn the red lever of the valve to the OPEN position. The Spa will empty by gravity through the general drain.
- Leave the drain valve open.
- Remove the filter cartridge/s from the filter (See Maintenance of the filter) and keep in a dry place.
- Clean and dry the Spa.
- Cover the Spa.

Do not leave water in the Spa without electrical connection at temperatures below 0ºC, as the pipes can freeze and damage the spa.

ATTENTION
Remember that when you drain your spa not all of the water runs off. If your spa is not going to be used for long periods, especially in winter, remove any stagnant water on the seats and on the bottom of the spa with a sponge. Any water remaining in the pipes can be sucked out through the water and air nozzles using a liquid suction pump. The pumps must also be emptied through the drain plug.

7. Error codes

Message	Meaning	Action required

Water Temperature is Unknown		After the pump has been running for 1 minute, the temperature will be displayed.
Possible freezing condition	A potential freeze condition has been detected, or the Aux Freeze Switch has closed.	All water devices are activated. In some cases, pumps may turn on and off and the heater may operate during Freeze Protection. This is an operational message, not an error indication.
The water is too hot – M029	The system has detected a spa water temp of 110°F (43.3°C) or more, and spa functions are disabled	System will auto reset when the spa water temp is below 108°F (42.2°C). Check for extended pump operation or high ambient temp.
The water level is too low	This message can only appear on a system that uses a water level sensor. It appears whenever the water level get too low (or the water level sensor is disconnected)	Automatically disappears when the water level is adequate. Pumps and the heater turn OFF when this message appears.
The water flow is low – M016	There may not be enough water flow through the heater to carry the heat away from the heating element.	Heater start up will begin again after about 1 min. See: **.
The water flow has failed – M017	There is not enough water flow through the heater to carry the heat away from the heating element and the heater has been disabled.	See: **.
The heater may be dry – M028	Possible dry heater, or not enough water in the heater to start it. The spa is shut down for 15 min.	See: **.
The heater is dry – M027	There is not enough water in the heater to start it. The spa is shut down.	After the problem has been resolved, you must reset the message to restart heater start up. See: **.
The heater is too hot – M030	One of the water temp sensors has detected 118°f (47.8°C) in the heater and the spa is shut down.	You must reset the message when water is below 108°f (42.2°C). See: **.

Flow-Related Checks		Check for low water level, suction flow restrictions, closed valves, trapped air, too many closed jets and pump prime.
Sensors are out of sync – M015	The temperature sensors MAY be out of sync by 3°F.	Call for Service if this message does not disappear within a few minutes.
Sensors are out of sync -- Call for service -- M026	The temperature sensors are out of sync.	The fault above has been established for at least an hour. Call for service. See **
Sensor A Fault, Senor B Fault – Sensor A: M031, Sensor B: M032	A temperature sensor or sensor circuit has failed.	If the problem persists, contact your vendor or a service engineer. See: **.
Comunications error	The control panel is not receiving communication from the System.	If the problem persists, contact your vendor or a service engineer.
Test software installed	The Control System is operating with test software.	If the problem persists, contact your vendor or a service engineer.
Program memory failure – M022	At Power-Up, the system has failed the Program Checksum Test.	This indicates a problem with the firmware (operation program) and requires a service call. See: **.
The settings have been reset (Persistent Memory Error) – M021		Contact your service organization if this message appears on more than one power-up. See: **.
The clock has failed – M020		If the problem persists, contact your vendor or a service engineer. See: **.
Configuration error (Spa will not Start Up)		If the problem persists, contact your vendor or a service engineer.
A pump may be stuck on – M034	Water may be overheated.	POWER DOWN THE SPA. DO NOT ENTER THE WATER. Contact your dealer or service organization.

Hot fault – M035	A Pump Appears to have been Stuck ON when spa was last powered POWER DOWN THE SPA.	DO NOT ENTER THE WATER. If the problem persists, contact your vendor or a service engineer.

** Some messages can be reset from the panel. Messages that can be reset will appear with a Clear Icon at the bottom of the Message Screen. Press the Clear Icon text to reset the message.

REMINDER MESSAGES

General maintenance helps: Reminder Messages can be suppressed by using the Reminders Screen. Reminder Messages can be chosen individually by the Manufacturer.

Check the pH : May appear on a regular schedule, i.e. every 7 days. Check pH with a test kit and adjust pH with the appropriate chemicals.

Check the sanitizer: May appear on a regular schedule, i.e. every 7 days. Check sanitizer level and other water chemistry with a test kit and adjust with the appropriate chemicals.

Clean the filter: May appear on a regular schedule, i.e. every 30 days. Clean the filter media as instructed by the manufacturer.

Change the water: May appear on a regular schedule. Change the water in the spa on regular basis to maintain proper chemical balance and sanitary conditions.

Clean the cover: May appear on a regular schedule.Vinyl covers should be cleaned and conditioned for maximum life.

Treat the wood: May appear on a regular schedule. Wood skirting and furniture should be cleaned and conditioned per the manufacturers instructions for maximum life.

Change the filter: May appear on a regular schedule. Filters should be replaced occasionally to maintain proper spa function and sanitary conditions.

Change the UV / Check the ozone: May appear on a regular schedule.

8. TROUBLESHOOTING

Problems	Reasons	Solutions
Insufficient flow of filtered water.	Filter is blocked by dirt.	Wash the filter.
The massage pump of the Jets does not work. Spa does not work.	The cable of the digital control panel is disconnected from the board. No electrical supply. Differential is disconnected.	Connect the cable to the board. Check that the pump is connected to the electric control panel. Connect the differential.

The massage pump of the air *Blower* does not work.	The cable of the digital control panel is disconnected from the board. No electrical supply The pump has disconnected owing to overheating.	Connect the cable to the board. Check that the pump is connected to the electric control panel. Let it cool for about 3 hours and then start-up the pump again.
Water leaks out through the *Venturi.*	Jets are closed. Jets are not properly installed. The outer trim of the jet turns a quarter to open and close the water flow. If this trim makes a complete turn, it is not properly installed, and the jet will have to be removed and then placed correctly.	Open the jet. Remove the jet. Pull the outer trim about 2 cm. Unscrew the jet turning anti-clockwise. Once it has been dismantled, replace the jet, by screwing in a clockwise direction. Press the outer trim back into place.
Limited airflow in the Jets.	*Venturis* are closed.	Open the *Venturis*.
Reduced airflow.	Starter brushes of the motor are worn.	Change the pump.
The water does not reach the required temperature.	Probe is damaged. Check programmed temperature.	Replace the temperature probe. Programme the temperature.

Note: In the section 7. Error messages, you can finde the diagnosis messages meaning to solve possible breakdowns.

9. Recycling and environment

Your Spa contains electrical and/or electronic material. When it reaches the end of its useful life, it must be treated as specialwaste.

Contact your local authorities to find out about the procedure for collecting and treating waste containing electrical and electronic material.

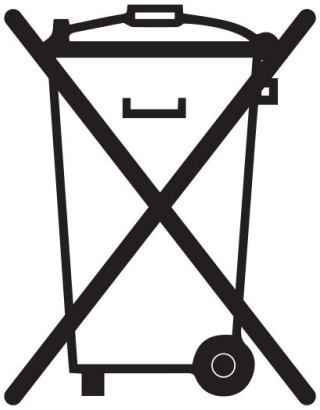

10. Evidence of conformity

iberspa

IBERSPA, S.L.
Pol. Ind
Av. Pla d'Urgell 2-8
25200 - Cervera, Lleida
(Spain)

ES	PRODUCTOS:	DA	PRODUKTER:	**PRIVATE SPAS**
EN	PRODUCTS:	S	PRODUKTER:	**PRIVATE COMPACT KITS**
DE	PRODUKTE:	FI	TOUTTEET:	
FR	PRODUITS:	N	PRODUKTER:	
IT	PRODOTTI:	GR	ΠΡΙΟΝΤΑ:	
PT	PRODUTOS:	PL	PRODUCTY:	
NL	PRODUKTEN:			
RU	продукт:			

ES - DECLARACION DE CONFORMIDAD
Los productos arriba mencionados se hallan conformes a : Directiva 2014/30/UE (Compatibilidad Electromagnética), Directiva 2014/35/UE (Baja Tensión) y la Norma Europea EN 17125:2018, EN 60335-1:2012+AC+A11, EN 60335-2 -60 :2005+A1+A11+A12+A2

EN - EVIDENCE OF CONFORMITY
The products listed above are in compliance with : 2014/30/EU (Electromagnetic Compatibility), Directive 2014/35/EU (Low Voltage) and with the European Standard EN 17125:2018, EN 60335-1:2012+AC+A11 , EN 60335-2 -60 :2005+A1+A11+A12+A2

DE - KONFORMITÄTSERKLÄRUNG
Die oben angeführten Produkte entsprechen den, Sicherheitsbestimmungen der Richtlinien der Elektromagnetischen Verträglich 2014/30/EU , der Niederspannungs Richtlinien 2014/35/EU, un der europäischen Vorrschrift EN 17125:2018, EN 60335-1:2012+AC+A11, EN 60335-2 -60 :2005+A1+A11+A12+A2

FR - DECLARATION CONFORMITÉ
Les produits mentionnés ci-dessus sont conformes aux : Directive Compatibilité Electromagnétique 2014/30/UE , Directive Basse Tension 2014/35/UE et à la Norme Européenne EN 17125:2018, EN 60335-1:2012+AC+A11 , EN 60335-2 -60 :2005+A1+A11+A12+A2

IT - DICHIARAZIONE DI CONFOMITÀ
I prodotti su elencati sono conformi alle seguenti : Directtiva 2014/30/UE (Compatibilita elettromagnetica), Directtiva 2014/35/UE (Bassa Tensione) e alla Norma Europea EN 17125:2018, EN 60335-1:2012+AC+A11 , EN 60335-2 -60 :2005+A1+A11+A12+A2

PT - DECLARAÇÂO DE CONFORMIDADE
Os produtos acima mencionado estâo conforme a : Directiva 2014/30/UE (Compatibilidade Electromagnética), Directiva 2014/35/UE (Baixa tensâo) e a Norma Europeia EN 17125:2018, EN 60335-1:2012+AC+A11 , EN 60335-2 -60 :2005+A1+A11+A12+A2

NL - CONFOMITEITSVERKLARING
Bovenstaande produkten voldoen aan de veiligheidsvoorschriften van de,Richtlijn Electromagnetische compatibiliteit 2014/30/EU , laagspannings richtlijn 2014/35/EU en aan de Europese norm EN 17125:2018, EN 60335-1:2012+AC+A11 , EN 60335-2 -60 :2005+A1+A11+A12+A2

RU - ДЕКЛАРАЦИЯ СООТВЕТСТВИЯ
Упомянутые выше модели соответствуют: Директиве 2014/30 / ЕС (об электромагнитной совместимости), Директиве 2014/35 / ЕС (о низком напряжении) и Европейском стандарте: EN 17125:2018, EN 60335-1:2012+AC+A11 , EN 60335-2 -60 :2005+A1+A11+A12+A2

DA - FÖRSÄKRAM OM ÖVERENSSTÄMMELSE
Ovans ende produkter ä i överenstämmelse med : Direktiv 2014/30/EU (Elektromagnestik kompatibilitet), Direktiv 2014/35/EU (L gspänning) och med Europeisk Standard EN 17125:2018, EN 60335-1:2012+AC+A11 , EN 60335-2 -60 :2005+A1+A11+A12+A2

S - OVERENSSTEMMELESESERKL RING
Ovenst ende produkter oppfyller betingelsene elektromagnetiskdirektiv 2014/30/EU , lavpenningsdirektiv 2014/35/EU, og Europeisk Standard EN 17125:2018, EN 60335-1:2012+AC+A11 , EN 60335-2 -60 :2005+A1+A11+A12+A2

FI - OVERENSSTEMMELSESERK RING
De ovenn vnte varer er i overensstemmelse med : Direktiv- 2014/30/EU (Elektromagnetisk forenelighed), Direktiv- 2014/35/EU (Lavsp nding) og i overensstemmelse med den europ iske standard EN 17125:2018, EN 60335-1:2012+AC+A11 , EN 60335-2 -60 :2005+A1+A11+A12+A2

N - VAKUUTUS YHDENMUKAISUUDESTA
Yllämainiut tuotteet ovat yhdenmukaisia direktiivin 2014/30/EU (Elektromagneettinen yhdenmuskaisuus), direktiivin 2014/35/EU (Matalajännite)sekä eurooppalaisen standarin EN 17125:2018, EN 60335-1:2012+AC+A11 , EN 60335-2 -60 :2005 +A1+A11+A12+A2

GR - ΑΗΑΩΣΗ ΣΥΜΒΑΤΟΤΗΤΑΣ
Τα παραπα΄νω προτόντα είναυ συμφωνα με την Οδηγία 2014/30/ΕΕ , (Ηλεκτρομαγνηυκηζ Συμβατστηταζ) την Οδηγία 2014/35/ΕΕ (Χαμηληζ Τασηζ) κου ε τον Ευρωπατκό Κανονισμ
EN 17125:2018, EN 60335-1:2012+AC+A11 ,
EN 60335-2 -60:2005+A1+A11+A12+A2

PL - DEKLARACJA ZGODNOŚCI
Wymienione powyżej produkty są zgodne z: Dyrektywą 2014/30/UE (Kompatybilność Elektromagnetyczna), Dyrektywa 2014/35/UE (Niskie Napięcie) oraz Norma Europejska: EN 17125:2018, EN 60335-1:2012+AC+A11 , EN 60335-2 -60 :2005+A1+A11+A12+A2

Firma/Cargo:
Signature/Qualification:
Unterschrift/Qualifizierung:
Signature/Qualification:
Firma/Qualifica:
Assinatura/Titulo:
Handtekening/Hoedanigheld:
подпись / квалификация:

Namnteckning/Befattning:
Underskrft / Stilling:
Signatur/Tilstand:
Allekirjoitus/Virka-asema:
Υπραφη/Θεση:
Podpisu/Stanowisko:

Gerente de Iberspa, S.L. P.P
Manager of Iberspa, S.L. by proxy

© Iberspa, 2024