User operation and installation manual professional spa

English

Contenido

Quick start guide

1. Introduction

2. Warnings and preventive measures

3. Installation

    3.1. Installation preventive measures

    3.2. Installation description

    3.3 Handling and locating the spa

    3.4. Advices to build foundations

    3.5. Electrical connections

    3.6. Hydraulic connection

4. Start up

5. Operating instructions

    5.1. Warnings

    5.2. Remote control (Spa buttons)

6. Maintenance

    6.1. Maintenance warnings

    6.2. Acrylic maintenance

    6.3. Maintenance in periods of non-use or absence

    6.4. Water maintenance

7. Error codes

8. Problems and solutions

9. Recycling and environment

10. Evidence of conformity

Quick start guide

1.

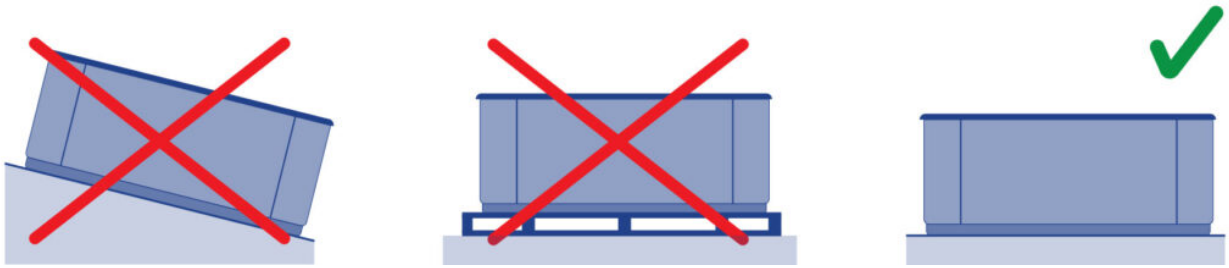

2.

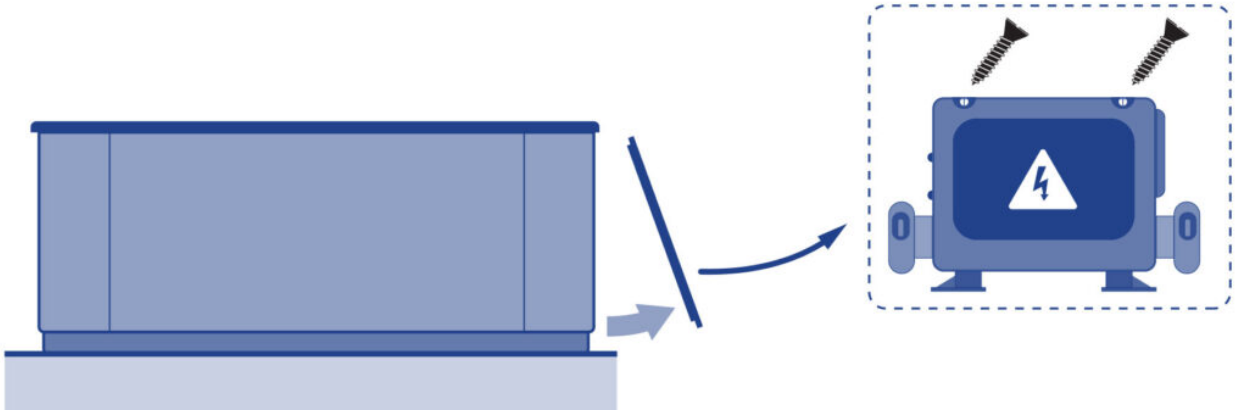

3.

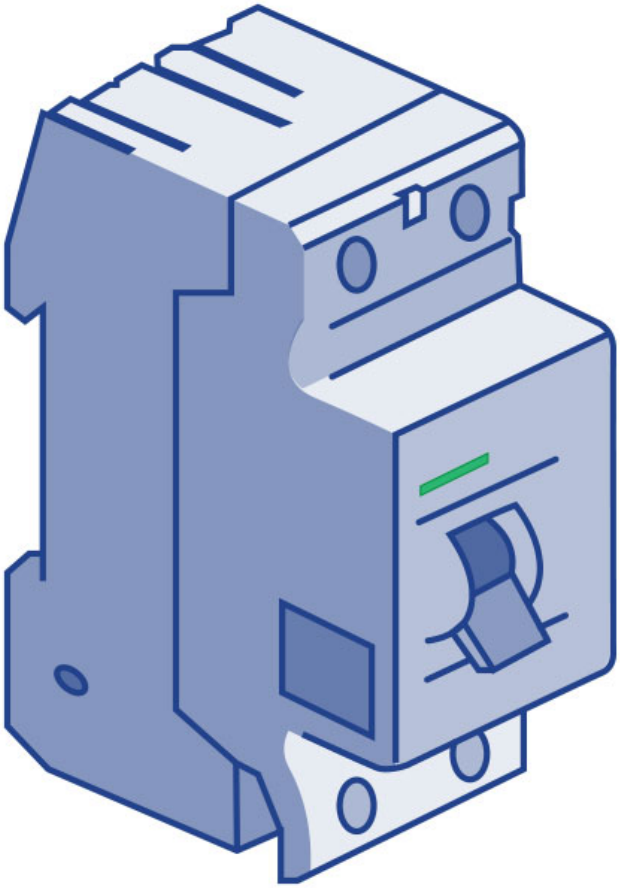

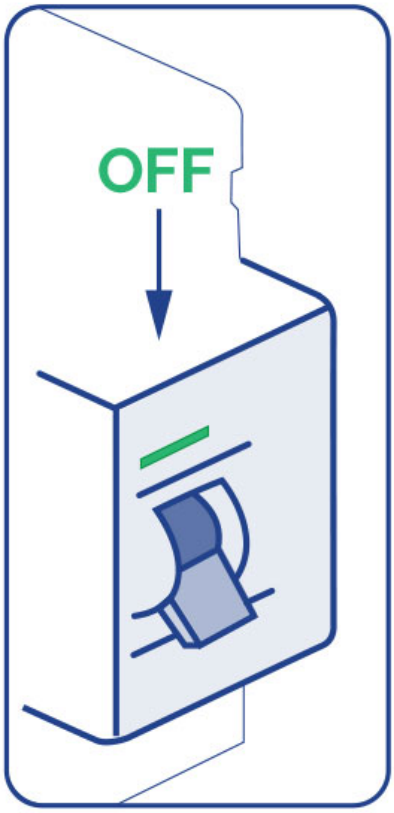

4.

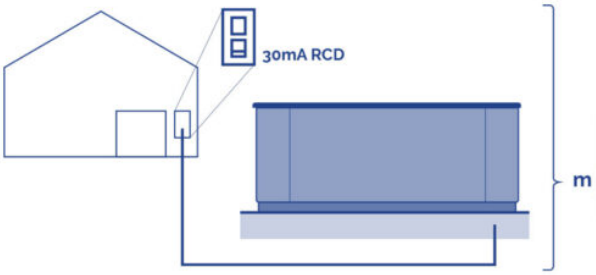

KW

	KW required										
	2.1	2.5	2.8	3.2	3.5	**4.4**	5.3	6.2	7.0	7.9	8.8
Distance	**Nominal section of the cable in mm²**										
6 - 11 m	2.5	2.5	2.5	2.5	4	**4**	6	10	10	10	10
11 - 15 m	**2.5**	**2.5**	**4**	**4**	**4**	**6**	**6**	**10**	**10**	**10**	**10**
15 - 20 m	4	4	4	6	6	**6**	10	10	10	16	16

5.

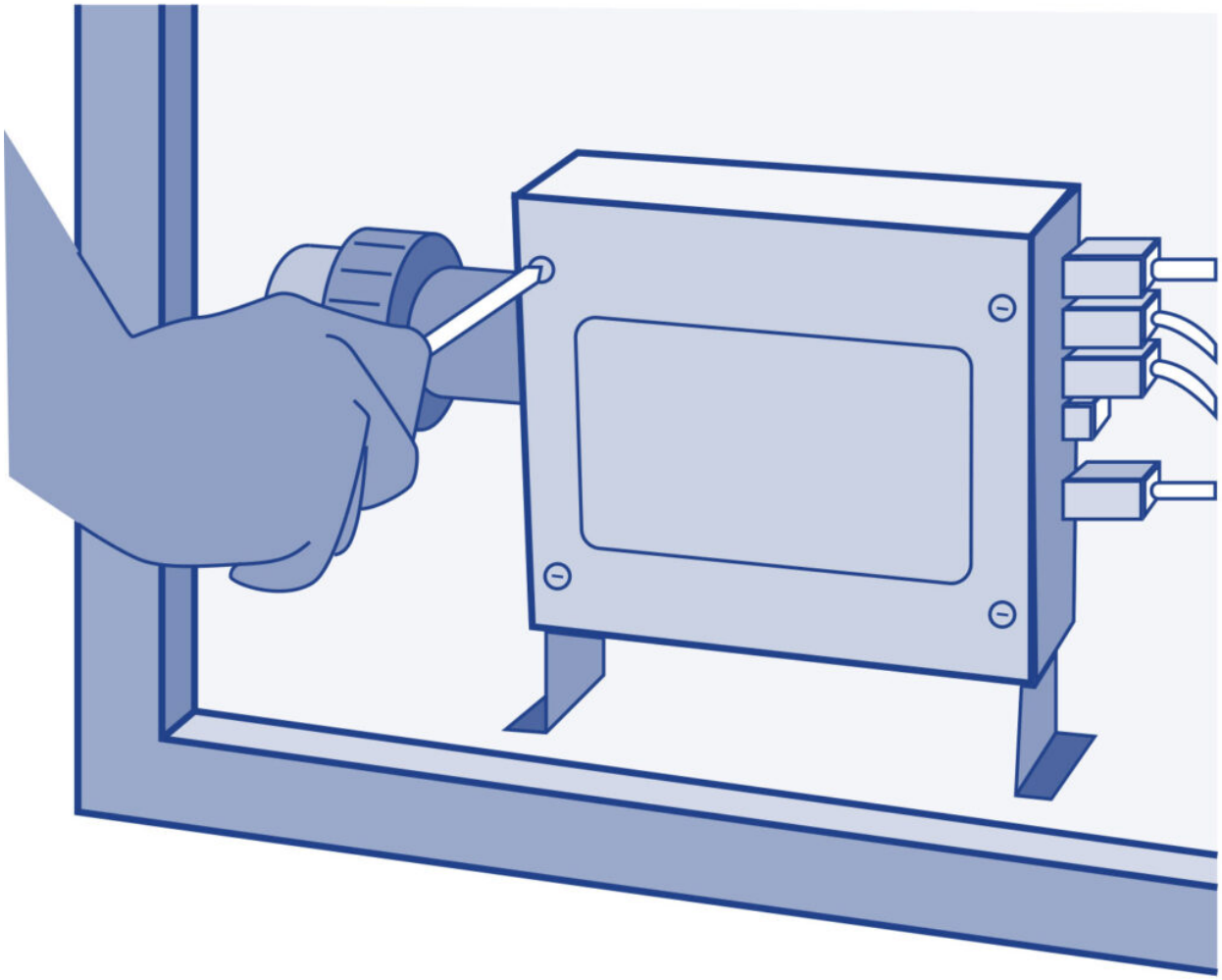

6.

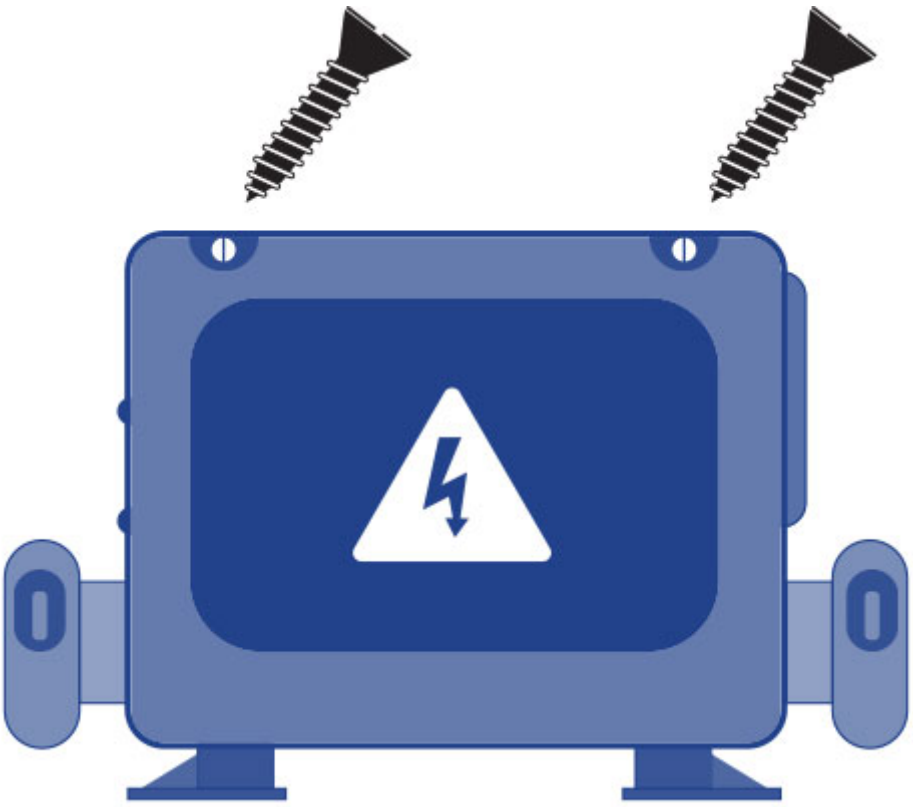

6a - Single phase
6b & 6c - Three phase

6a.

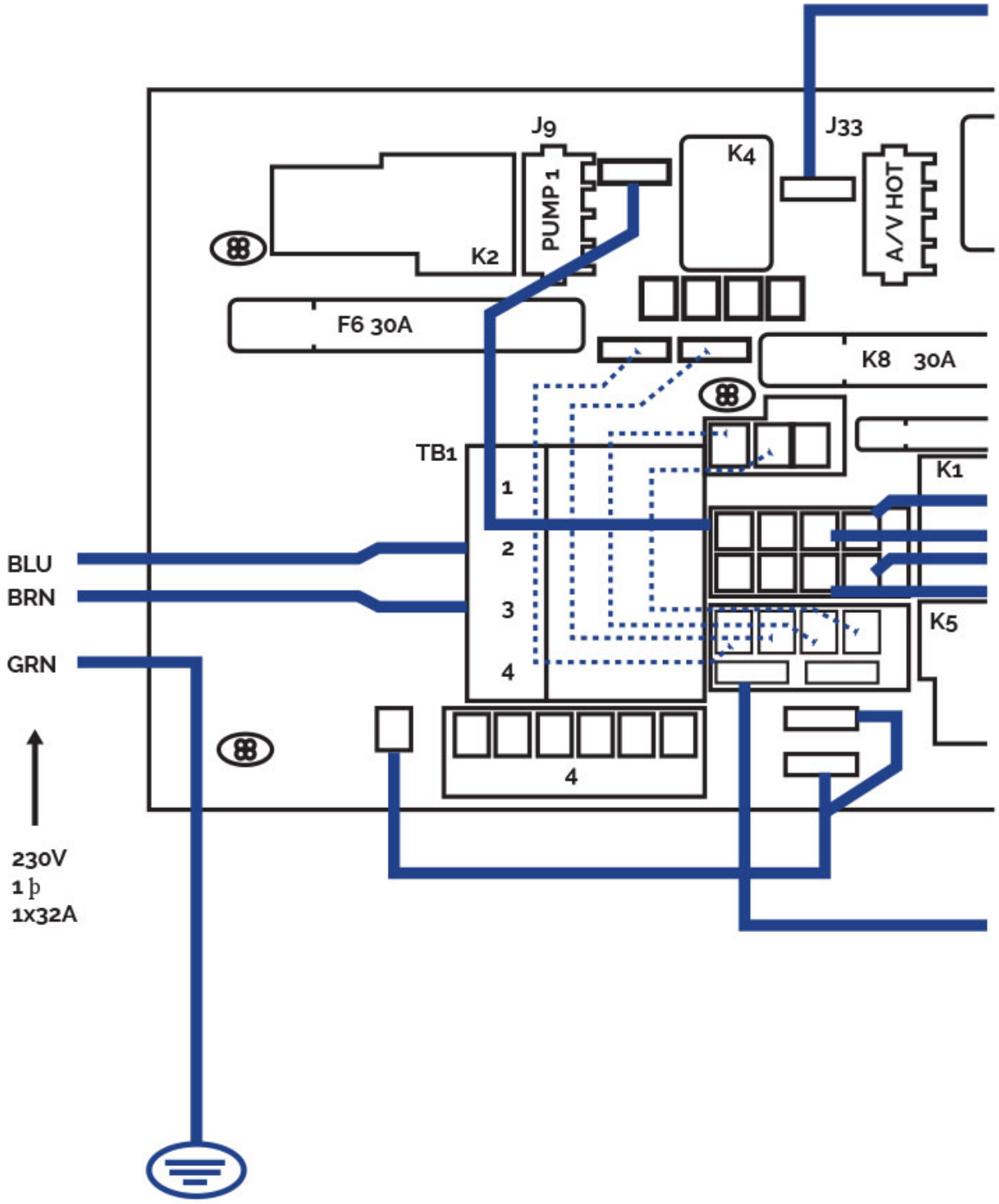

Single line 230V 32A

6b

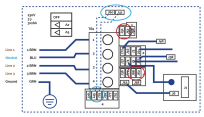

Three-phase line 380V III
BP21G1WL

Remove bridges;
J51-J88 and J52-J62
Changes this bridges
J60-J36 -> TO J60-J45
J41-J12 -> TO J41-J79
Power requirements:

3 Services 5 wires: Line 2, Line2, Line 3, Neutral, Ground 400VCA, 50/60Hz 3 phase, 16A (Circuit breaker rating = 20A max each phase line).

6c.

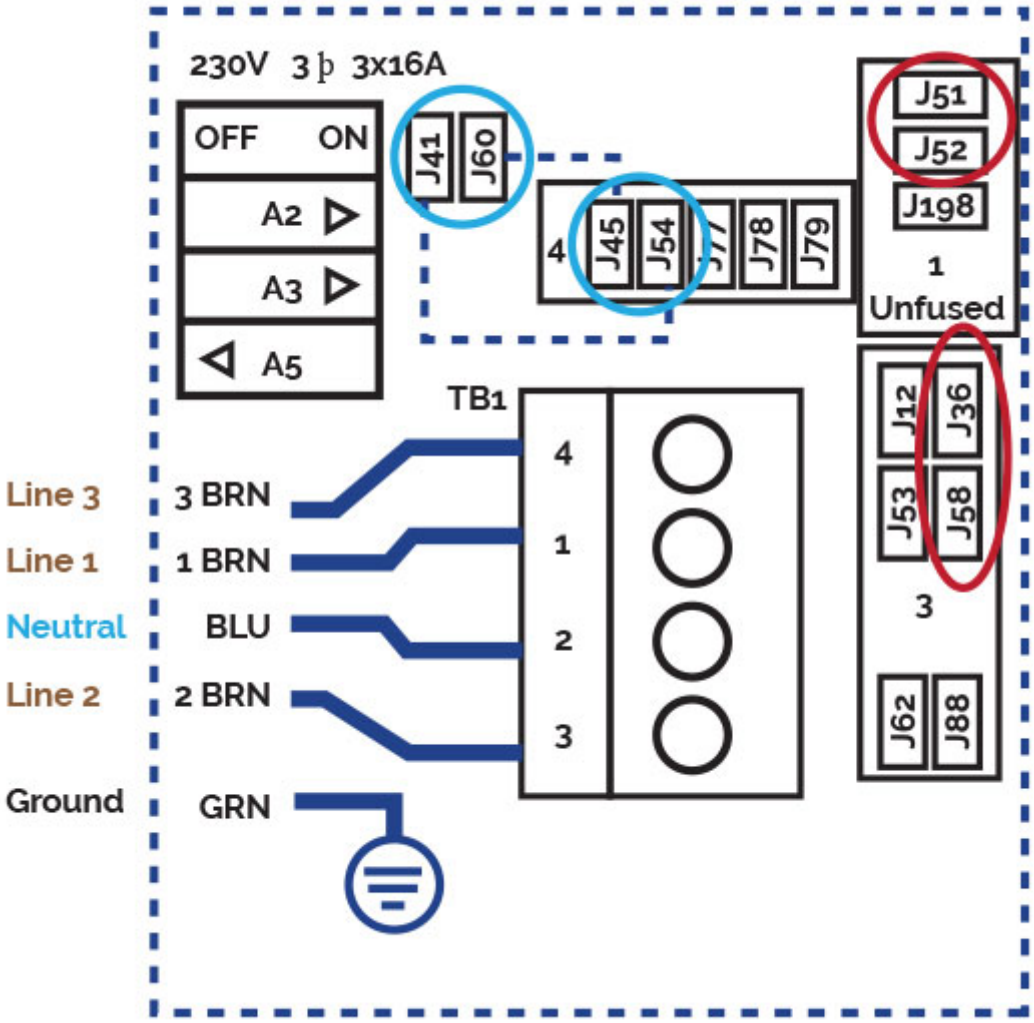

Three-phase line 400V
BP013G1 & BP013G2

Remove jumpers:
connecting J51 and J58
connecting J52 and J36
Changes this bridges:
J41 -J53 -> TO J41 - J54
J60-J12 -> TO J60-J45
Put DIP switches A5 on OFF and A2, A3 on ON position.
Power requirements:

3- Service 5 wires: Line 2, Line 2, Line 3, Neutral, Ground 400VCA, 50/60 Hz* 3 phase, 16A (Circuit breaker rating = 20A max each phase line). *BP systems automatically detect 50Hz vs 60Hz

7.

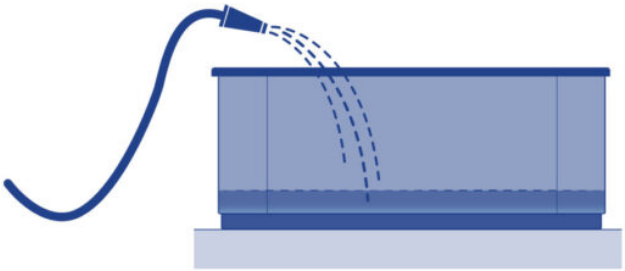

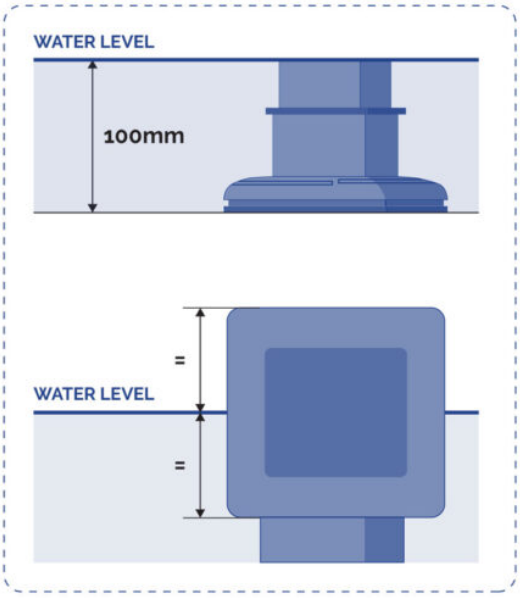

8.

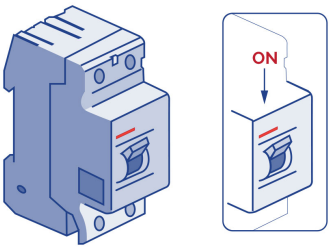

9.

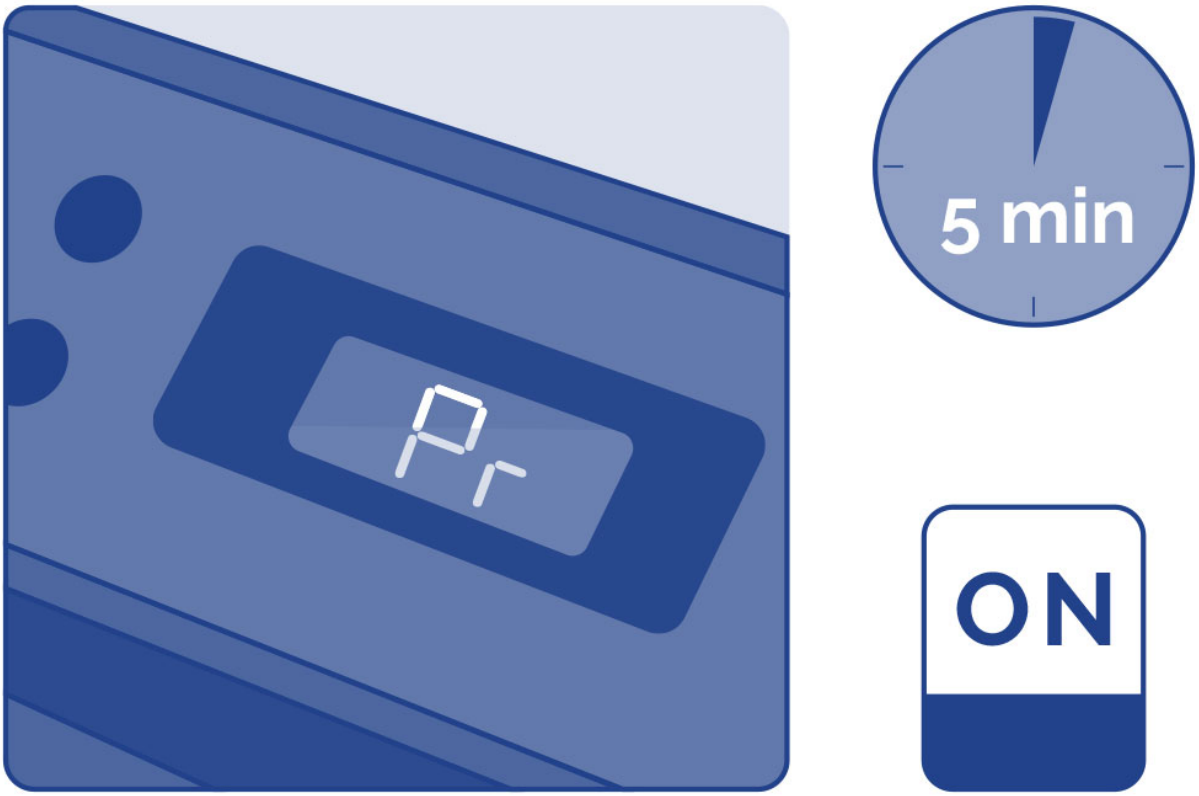

10.

11.

SPA SYSTEM CONFIGURATION

https://www.youtube.com/watch?v=EvKx_CkS_tw

12.

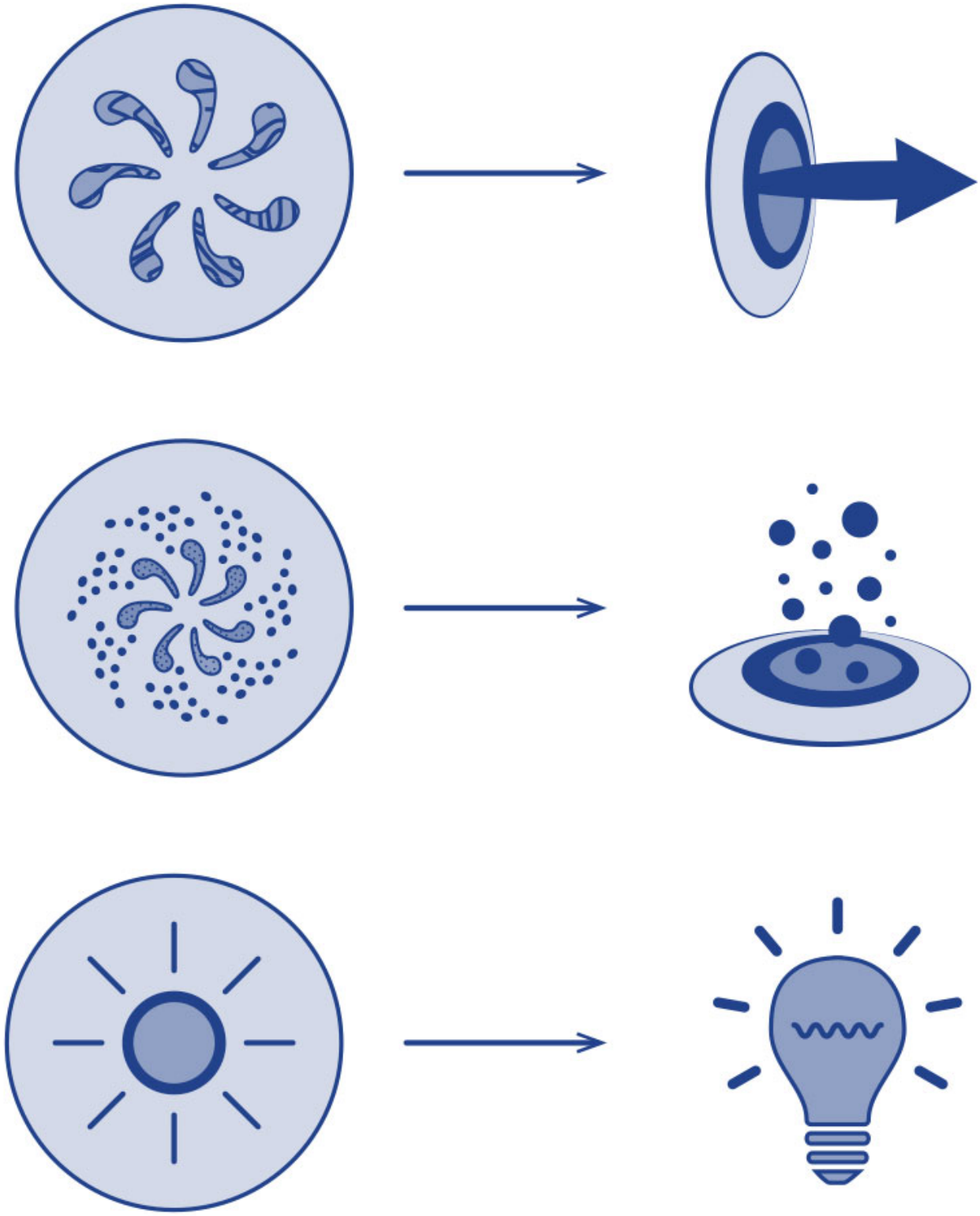

13.

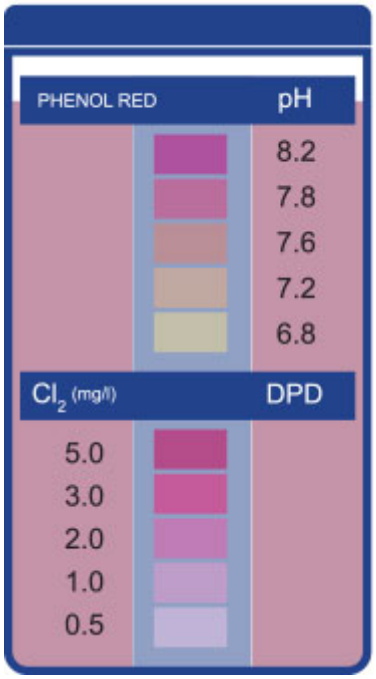

1. Introduction

This manual contains all the necessary information for fully enjoying your Spa.We suggest you take some time to go over the points below.

The Spa is an element designed especially for bathrooms, offering a bath/massage combination.

It consists of a closed water circuit powered by pumps which, combined with air, produce a relaxing massaging effect on your body.

For the massage bath to be effective, the water in the circuit must be at a temperature of between 34ºC and 37ºC, which is achieved by means of an electric heat exchanger.

If you have any questions or queries regarding the operation or maintenance of this product, contact the installer or your local distributor. They are specialised professionals and their knowledge will make things easier for you and will help you to enjoy this product.

IMPORTANT: The manufacturer reserves the right to change part of the designs or specifications without prior notice and without incurring in any obligations.

2. Warnings and preventive measures

- Take all precautions to avoid unauthorised access of children inside the Spa. In order to avoid accidents, ensure children are supervised by an adult at all times. Control entering and exiting the Spa in order to avoid slips due to wet surfaces.
- Do not allowanyone to play inside the Spa with metal or sharp objects that could damage the acrylic surface.
- Make sure that bathers cannot access any of the Spa’s electrical components.
- Do not turn on the machine without there beingwater inside the Spa.
- Do not use electrical devices such as radios or dryers inside the Spa.
- Always keep the minimum water level indicated in the skimmer (in the case of private use

Spas) or that indicated in the level probes of the surge tank in the case of public use Spas.

3. Installation

3.1. Installation preventive measures

- A qualified professional must install, start and perform maintenance on the system in strict adherence to the installation instructions and following all indications given.
- This system may not be plugged into a domestic power line. Verify that the characteristics of the electrical installation meet the system requirements: 3 phases, 400V between each phase and 230V between phase and neutral.
- It is mandatory to comply with all applicable electrical safety standards of the country where the system is installed.
- The safety of people and materials should be ensured. Regulations and established safety codes must be respected.
- The electrical input of the system should always be protected by a highly sensitive RCD (Residual Current Device).
- Use only the highest quality connection, which must be grounded.
- It is essential to choose the appropriate cross section for the cables.
- Check that the thermal magnetic circuit breakers have been calibrated according to the power consumption (amperage).
- Never use the electric control box to connect other equipment.
- No modification is permitted without the express consent of the manufacturer.
- Use only original spare parts supplied by the manufacturer.
- Some elements of the equipment operate at dangerously high voltage. Do not handle them if the system is not completely disconnected from the power supply and start up devices are blocked.
- The limit values which appear on the electric switchboard must not, under any circumstance, exceed the advised amperage.
- Check the wiring and hydraulics before booting the system or connecting it to the power.
- Make sure that no electric component is in contact with water.
- Do not handle the equipment with wet feet.
- Do not switch on the system if the Spa is empty.

3.2. Installation description

GENERAL DIAGRAM

SPA WITH OVERFLOW

Spas with overflows can redirect the water displaced by users into a balance tank, always maintaining a stablewater level inside the Spa tub.

See below a general diagram of the installation of this type of Spa.

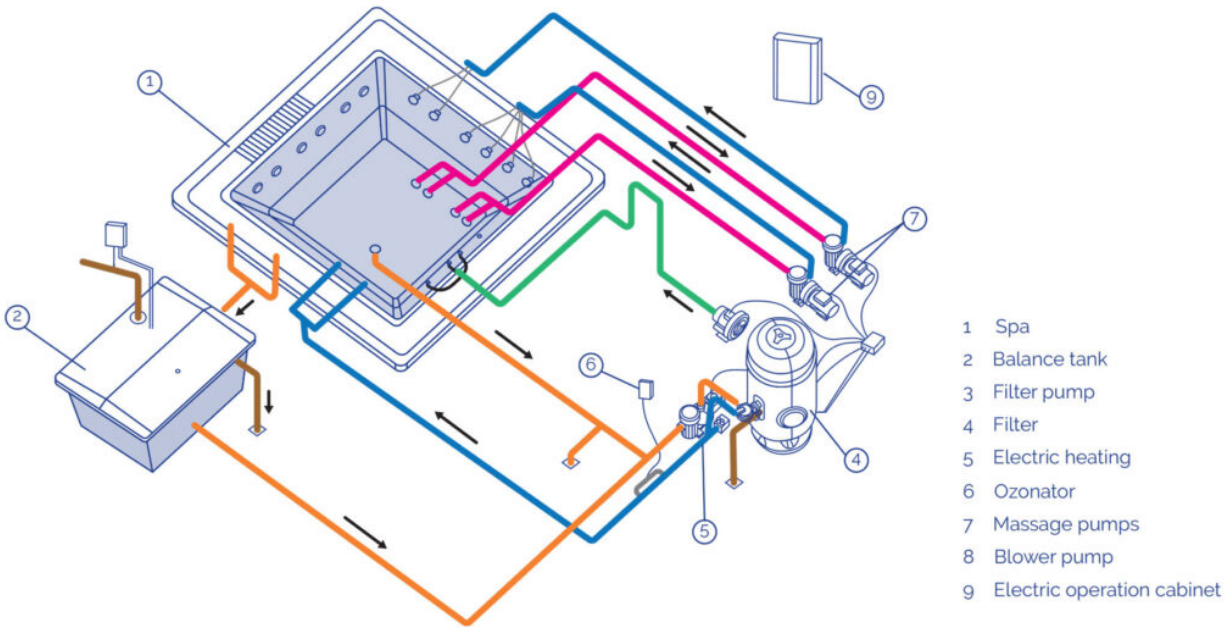

SPA WITH SKIMMER

Spas without overflows have a different setup. No balance tank is required; instead, the Spa water is suctioned directly via a skimmer.When users enter the Spa, thewater level rises; the tub may overflow if the number of users exceeds the indications for each Spa.

The installation of both Spas with overflows and Spas with skimmers include the recirculation circuit,water massage, air massage and an electrical installation, all of which are detailed below.

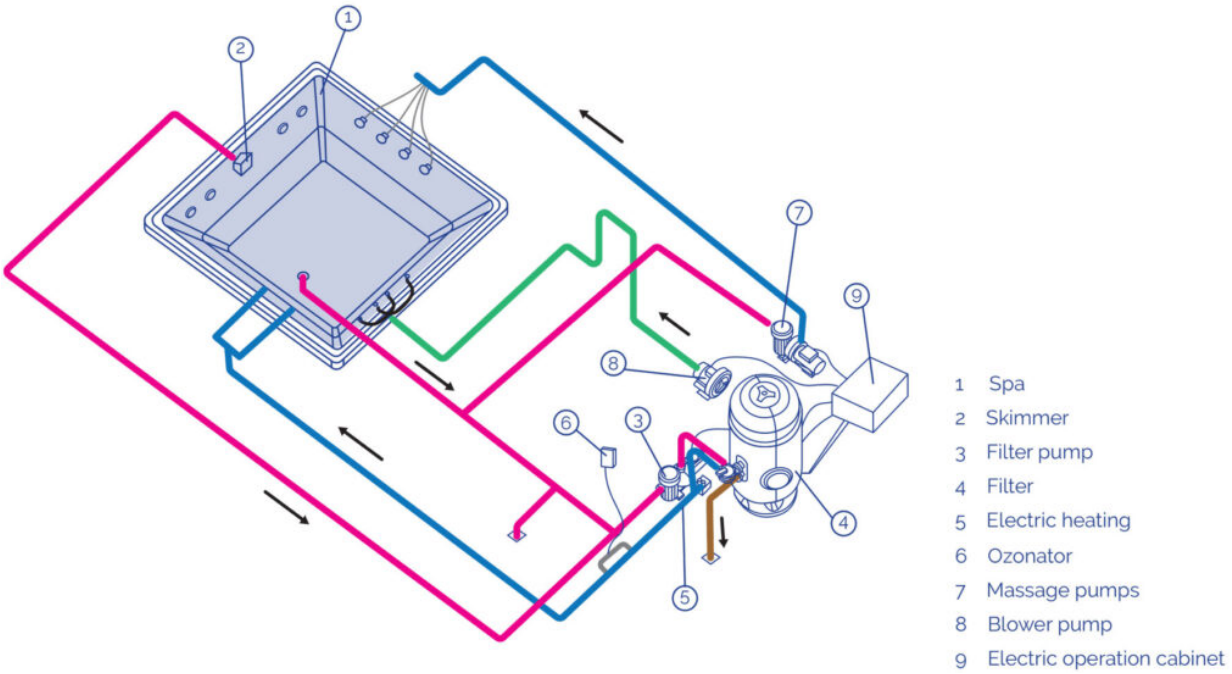

RECIRCULATION CIRCUIT

The function of this circuit is to maintain the quality of the Spa water. This is achieved by means of water recirculation through a purification filter, a heating system and a disinfection system.

SPA WITH OVERFLOW

Given that the Spa has an overflow, it is essential to maintain the water level constant and at maximum level. In order to achieve this, it is necessary to install a balance tank installed in series with the recirculation circuit. Doing so will compensate the fluctuations in level caused by variations in the number of bathers.

Although there are different ways of setting up the recirculation circuit, we proceed to detail the two most popular systems: “Floor suction” and “Floor return”. Check the regulations in force in each country in order to establish which system is best.

SPA FLOOR SUCTION

This option makes it possible to collect part of the recirculationwater from the Spa floor drain.

The filtered water is absorbed both from the balance tank (mostly) and the Spa floor drain via the filter pump, and is directed towards the sand filter, the heating and the ozonator or disinfection system; to be directed towards the Spa via the return nozzles.

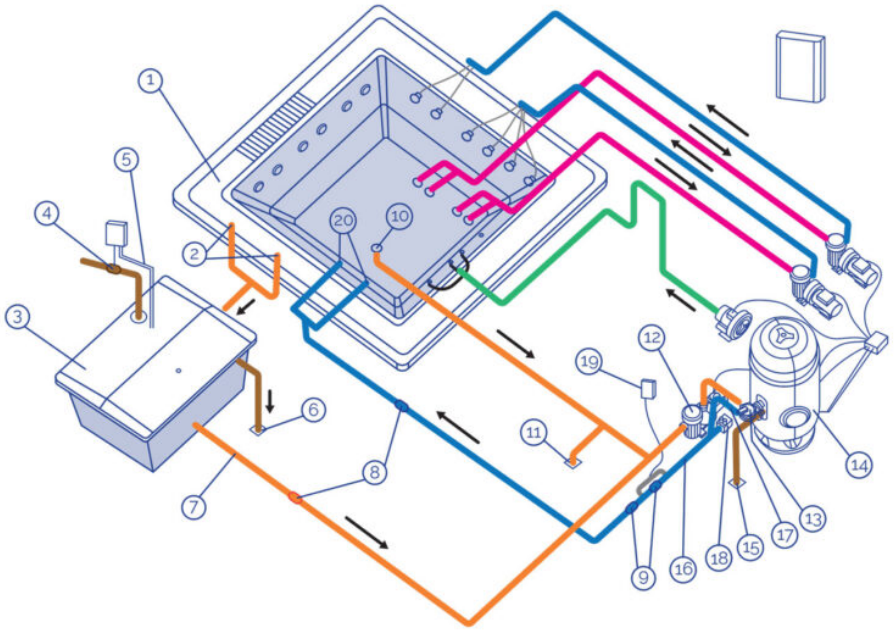

1 Overflow
2 Overflow drains
3 Balance tank
4 Filling solenoid valve
5 Level probes
6 Balance tank drain
7 Balance tank suction
8 Anti-return valve
9 By-pass valve
10 Drain
11 Spa drainpipe
12 Filter pump
13 Selector valve
14 Filter
15 Filter drainpipe
16 Electric Heating
17 Temperature probe
18 Flow detector
19 Ozonator
20 Spa return nozzles

SPA FLOOR RETURN

This option allows you to direct part of the already filtered and heated water both via the return nozzles and via the Spa floor drain.

The filtered water is only suctioned from the balance tank by the filter pump and is directed toward the sand filter, the heating and the ozoniser or disinfection system, to then be directed towards the Spa via the return nozzles and the Spa floor drain.

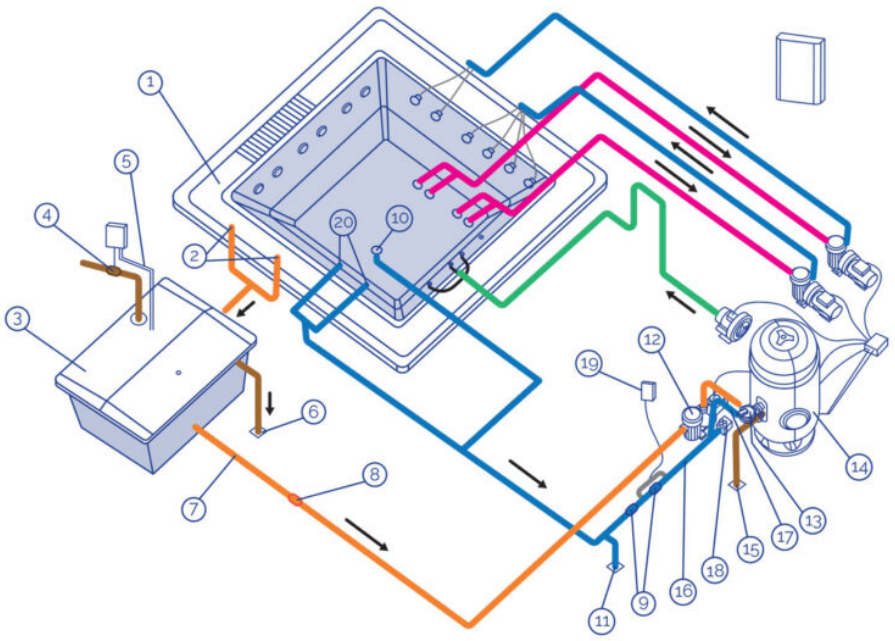

1 Overflow
2 Overflow drains
3 Balance tank
4 Filling solenoid valve
5 Level probes
6 Balance tank drain
7 Balance tank suction
8 Anti-return valve
9 By-pass valve
10 Drain
11 Spa drainpipe
12 Filter pump
13 Selector valve
14 Filter
15 Filter drainpipe
16 Electric Heating
17 Temperature probe
18 Flow detector
19 Ozonator
20 Spa return nozzles

SPA WITH SKIMMER

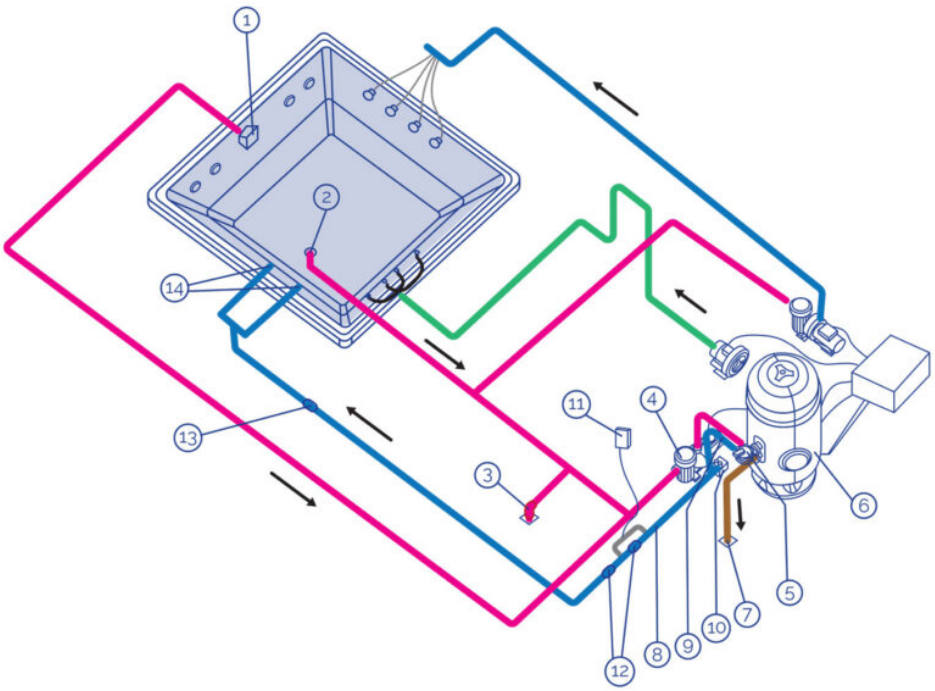

1 Skimmer
2 Drain
3 Spa drainpipe
4 Filter pump
5 Selector valve
6 Filter
7 Filter drainpipe
8 Electric heating
9 Temperature probe
10 Flow detector
11 Ozonator
12 By-pass valve
13 Check valve
14 Spa return nozzles

HEATING CIRCUIT

The basic components present in all heating circuits are:

FILTER PUMP

Designed to carry out the filter and heating circuit, recycling the water of the Spa in approximately 6 to 20 minutes. Suctions from the Skimmer or Surge Tank, directing the water through the filter and electric heating, via the return nozzle.

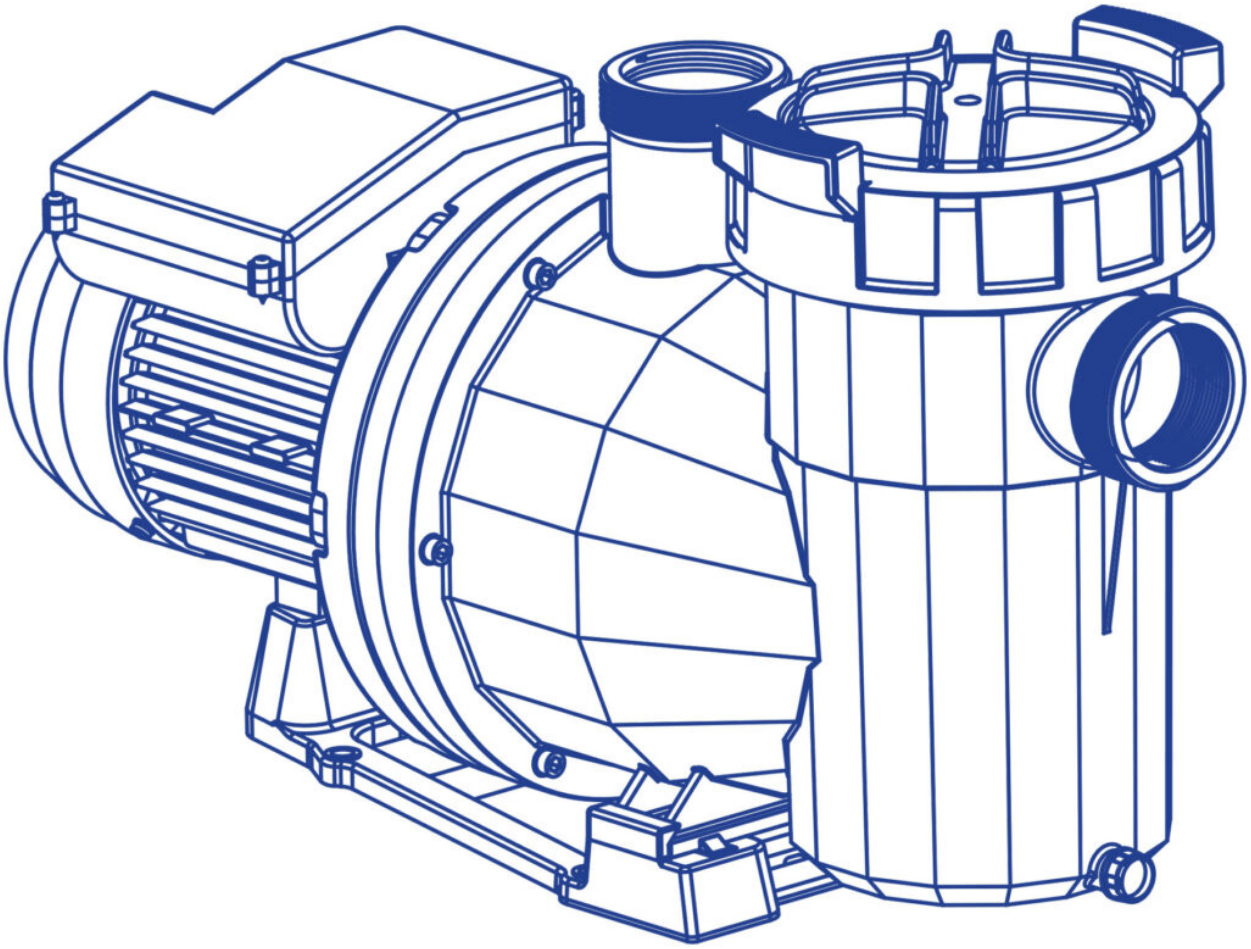

ELECTRIC HEAT EXCHANGER

This makes it possible to maintain the desired temperature. It must be placed in the filter circuit after the filter, so as to avoid air bubbles accumulating inside.

The heat exchanger incorporates a safety thermostat with manual reset. This avoids the heat exchanger from being damaged if the Spa is started up without anywater circulating.

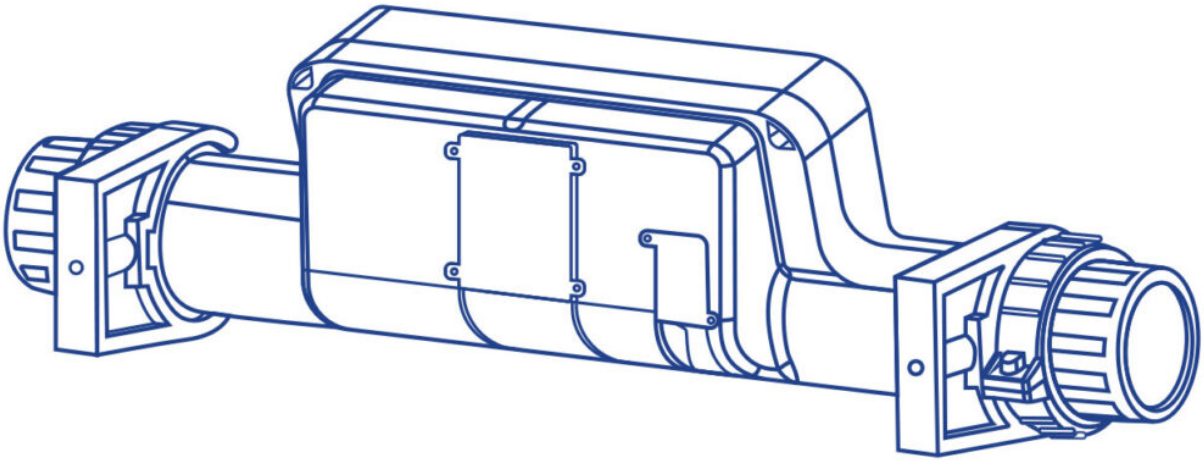

FILTER

Element which filters in order to ensure thewater is of an adequate quality.

The size of the filter is determined on the basis of:

• Volume of the Spa.

• Water recirculation time.

• Filtering speed.

• Filtering surface.

FLOW SENSOR

Safety device designed to prevent the heat exchanger from operating if there is no water flow in the filtration circuit.

WATER MASSAGE CIRCUIT

The water is suctioned by the massage pump through the drainpipes and is returned to the Spa via high speed jets.

There can be several massage circuits in a single Spa, each activated by a massage pump. Depending on the Spa and the number of jets it has, there may be one, two or even three massage pumps.

In order to boost the water massage a connection is made with an ambient air intake. This way, when the water circulates through, thanks to the Venturi effect, the air is suctioned, creating the air-water mix and producing a more intense massage.

Keep reading to see the general diagram of water spa massage.

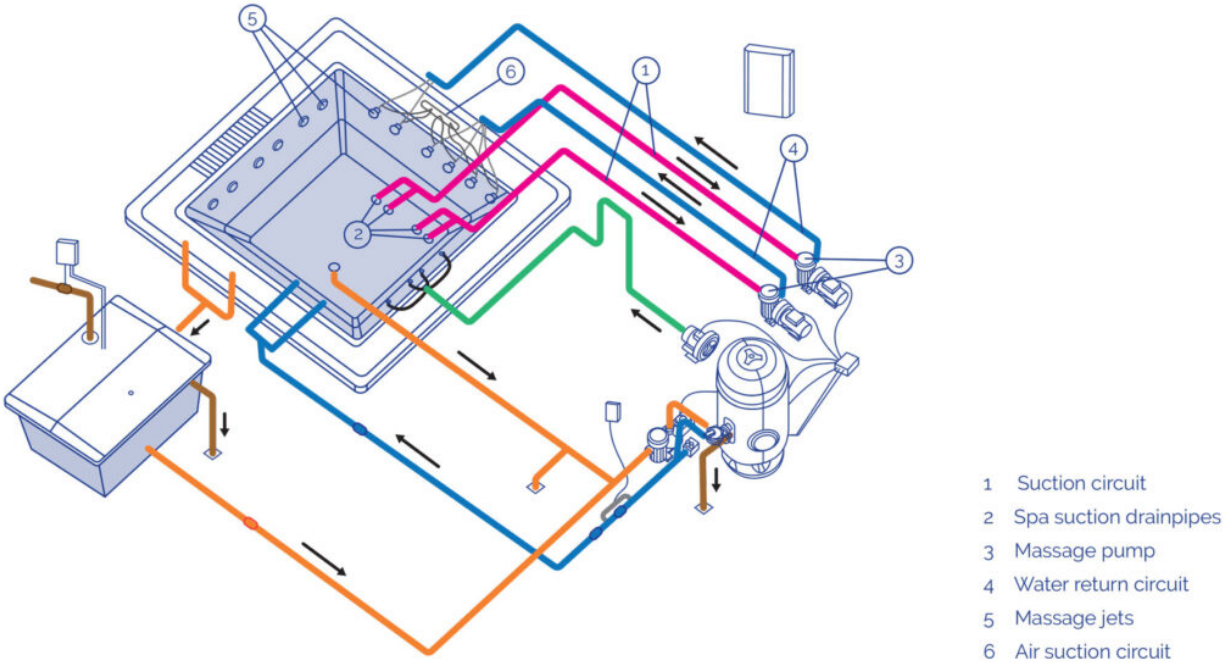

AIR MASSAGE CIRCUIT

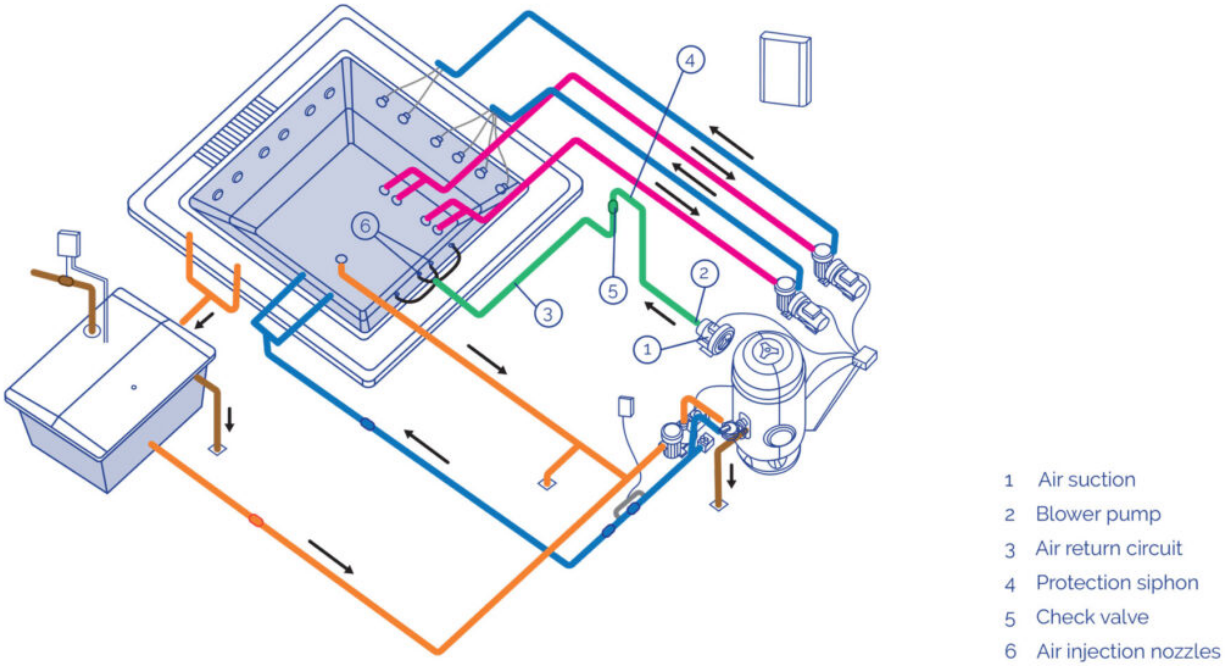

BLOWER PUMP

Continued use blower pump for Compact Kit in public use installations. They operate with a 400 V AC III electrical supply as standard.

AIR CIRCUIT

The mission of the air circuit is to return air from the blower pump to the Spa. The air is distributed inside the Spa via a series of blowing nozzles located on the floor or on the seats of the Spa.

3.3 Handling and locating the spa

- Handling of the Spa must be done very carefully and in a controlled manner by several persons.
- The Spa must never be hold by the pipes.
- The Spa should be installed following the criteria below.
- No material should be used or located below the Spa and around it (in a minimum perimeter of one meter) unless it is completely resistant to humidity and water. The Spa warranty does not cover any damage to materials, decorative or ornamental objects that may deteriorate due to flooding or atmospheric humidity.
- The Spa must be located in a duly adapted space which is adequate for withstanding significant damp and condensation. If this is not so, the warranty will not cover material or personal damages.
- It is essential to have an adequately sized drain for draining out any water that could reach the area under the Spa.
- The base where the Spa will be installed should be large and strong enough to with stand the weight of the Spa, the water and the users. If this is not so, the warranty will not cover the damages caused. Check the building regulations in force.
- Prior to the installation, if you believe that for any reason you may have to extract the Spa from its initial location, you should take this factor into account, and avoid having to break down masonry or structures and pipes should the Spa have to be unassembled. The warranty does not include repair of any damages caused in this instance.

3.4. Advices to build foundations

Below we provide some basic advice as to how to build foundations for the Spa. It is essential to comply with building regulations in force in all cases.

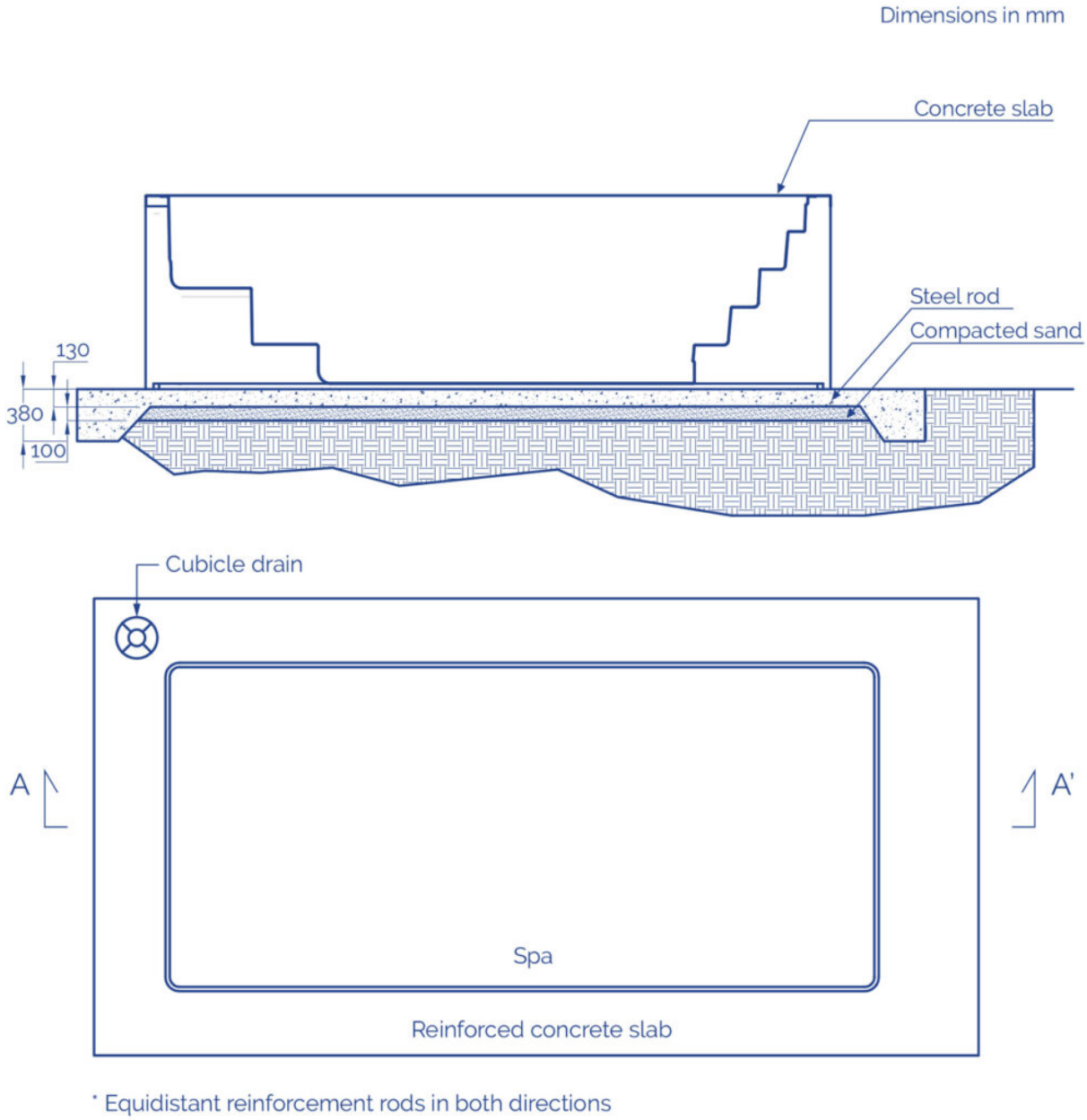

The Spa is supplied with a metal structure to make installation easier. This structure has several support points.

Before filling up the Spa, these levelling points must be regulated so that all of them are in contact with the ground.

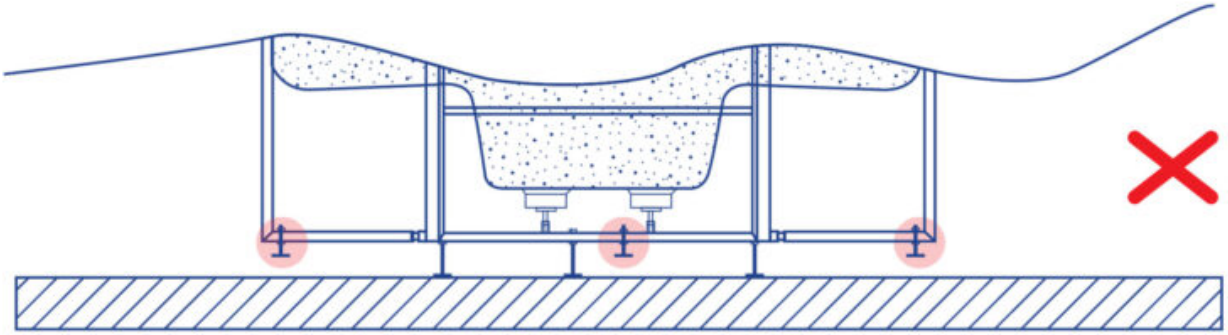

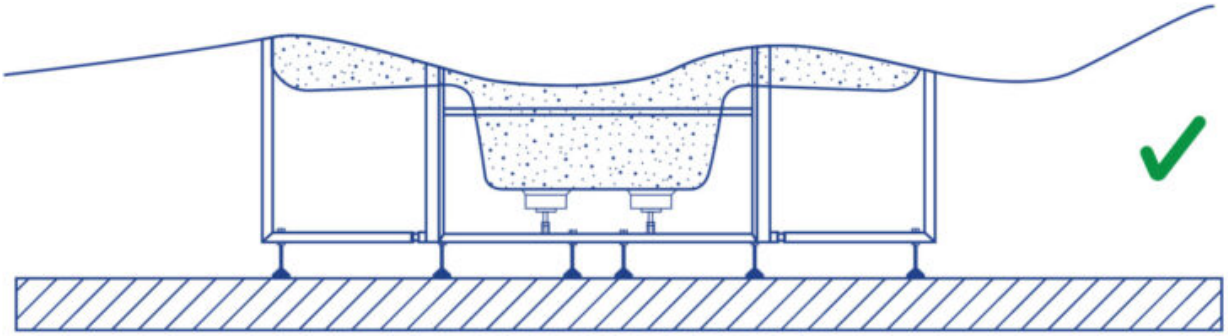

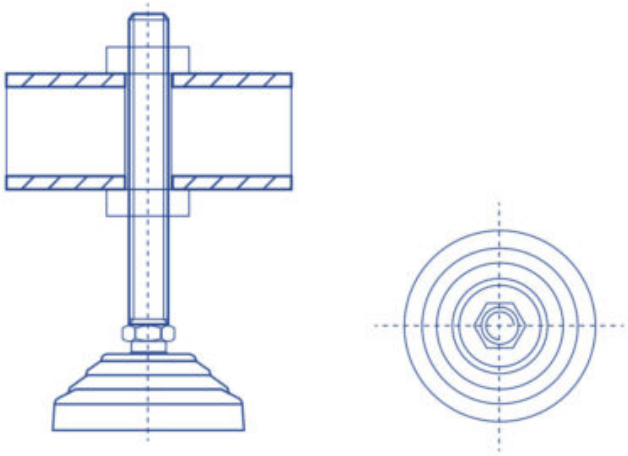

The Spa must be completely supported by the support structure, and must never be supported by its upper edge; otherwise the possible bending would cause the Spa shell to break.

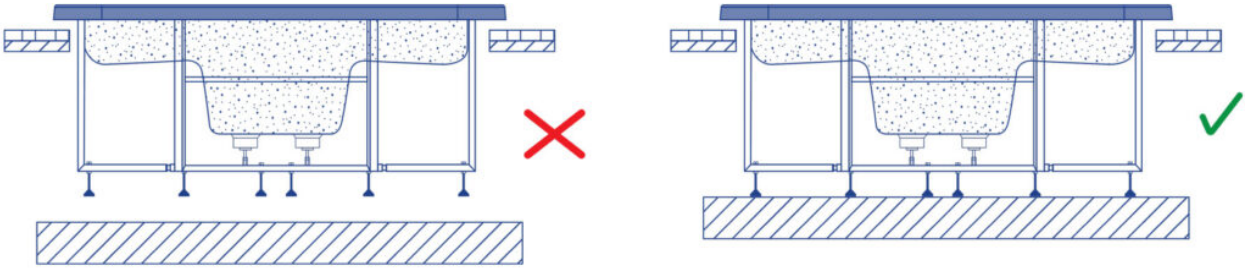

In order to seal the lip of the Spa to the foundations, use elastic silicone special forwater installations.

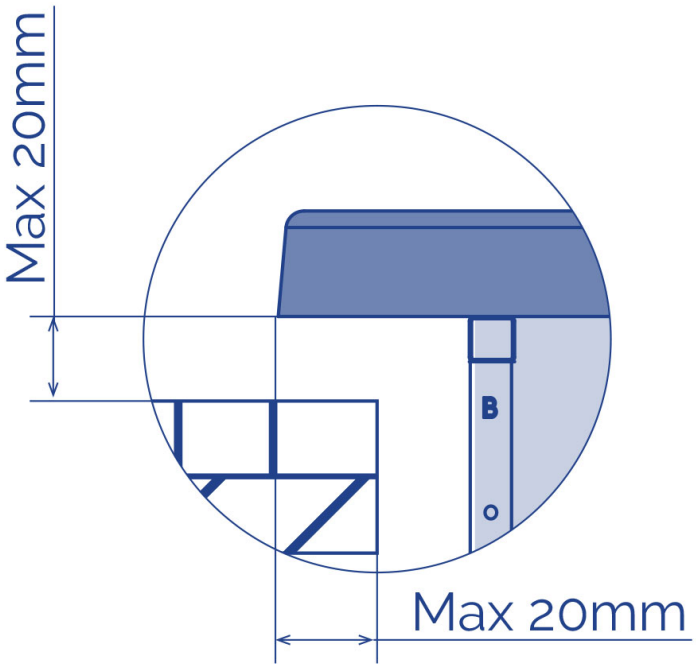

Once the Spa has been correctly fitted, finish the installation taking into account that you must leave a free passage of at least 400mm around the shell for possible maintenance works. Never place elements that may touch the body of the Spa, pipes or accessories in this area. Leave a trapdoor or accessway around the Spa for maintenance.

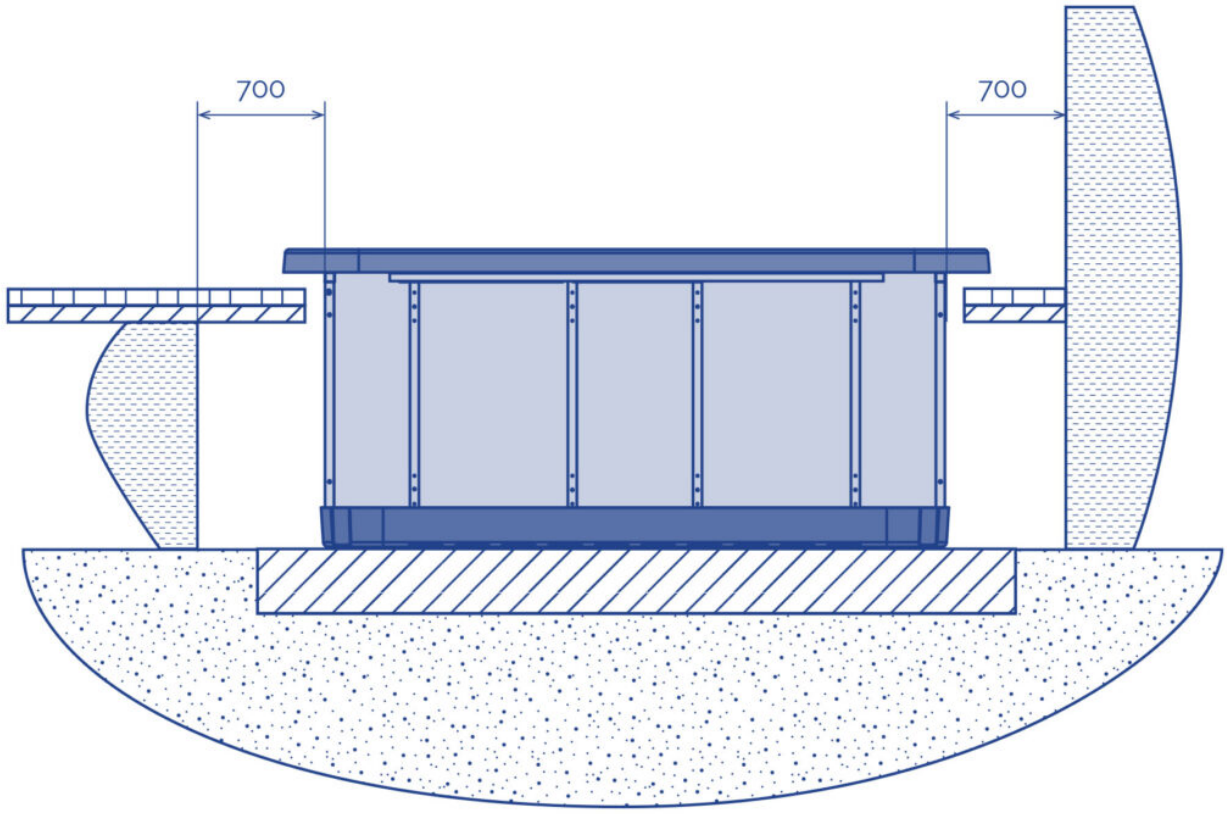

Never fill in the Spa's upper edge with cement or any other material that may have an expansion / contraction different to that of the Spa shell.The Spawould end up cracking.

Never fill in with concrete the Spa's pipes or accessories.

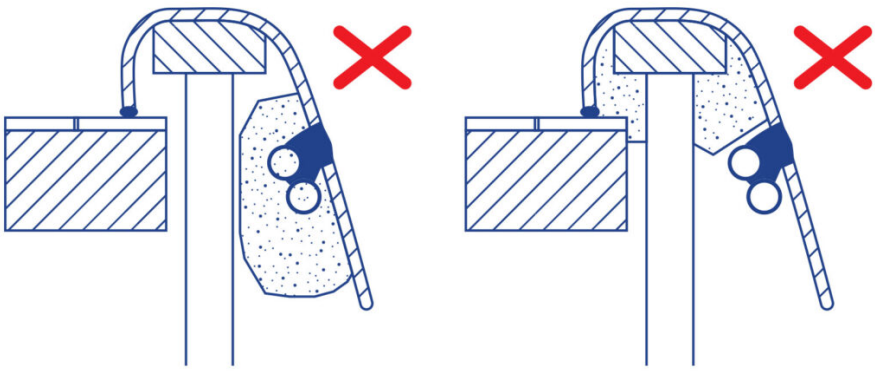

3.5. Electrical connections

Some advices to take into account before doing electrical connections:

- Pumps neutral wire remains free.
- Make sure the power supply is unconnected before starting the installation procedure.
- Respect indicated cable sections and distance between components.

To ensure a proper management of the electronic signals the distance between the components should not exceed the following:

- Electronic push buttons - Electronic Board 15m
- Spa-Hydraulic kit (Pumps).....7m

- Balance Tank (Capacitive level sensors) - Electronic Board..... 15m
- Heater (Temperature sensor) - Electronic Board.....6m
- Solenoid Valve - Electronic Board.....20m

CONNECTION BETWEEN COMPACT KIT AND ELECTRIC CONTROL

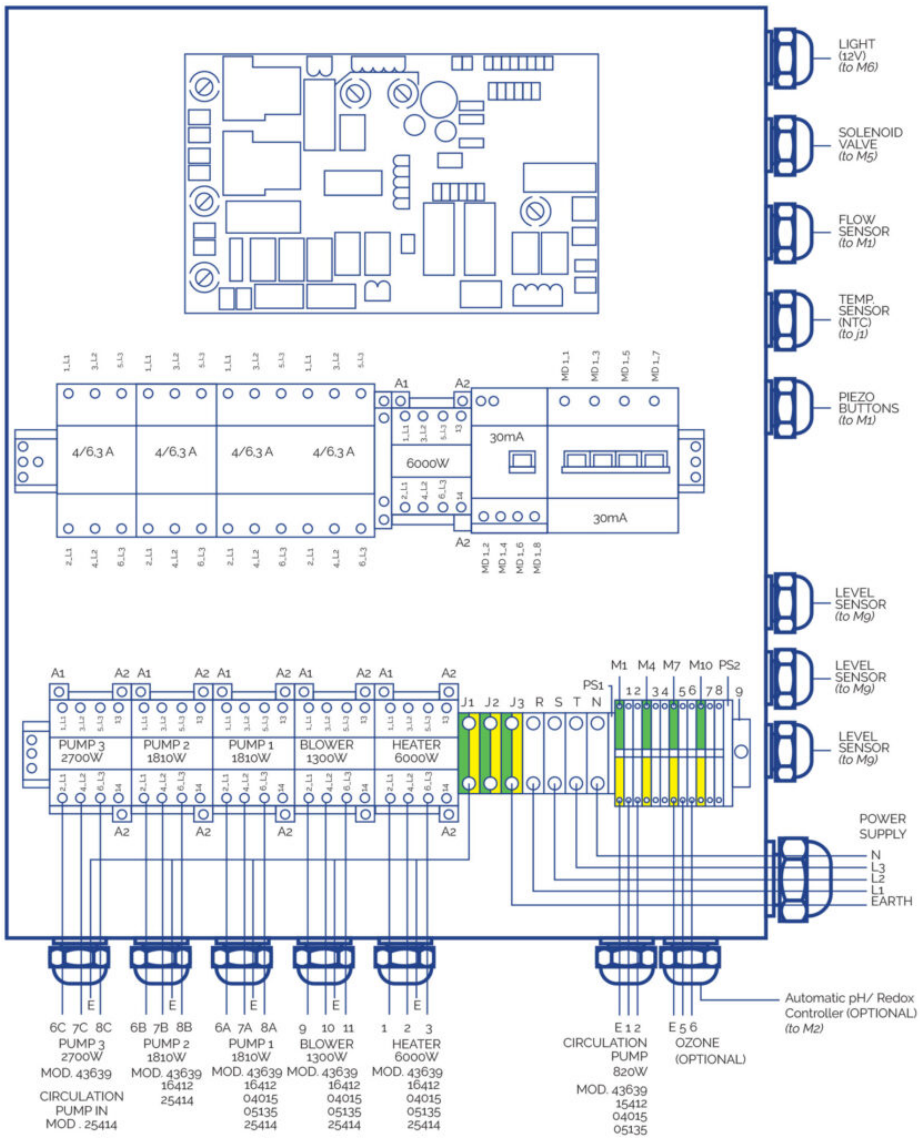

WIRING SECTIONS

Connect cables to their corresponding sections to ensure proper functioning and to prevent potential electrical problems that could affect the user's safety.

P max [W]

	20 > L [m]	**20 ? L 35 [m]**	**35 ? L < 55 [m]**
Sc [mm^2]	20	35	55
0,5	882	504	321
1	1764	1008	641
1,5	2646	1512	962
2,5	4410	2520	1603
4	7055	4032	2566
6	10583	6047	3848

10	17638	10079	6414
16	28221	16126	10262

KIT 43639

A			
Element	**P total [W]**	**P phase [W]**	**I phase [A]**
R	6000	2000	9
P.F	820	273	1.6
P.2	1810	603	3.2
P.3	2700	900	3.2
B	1300	433	3.8
PTC	-	-	-
F	-	-	-
T	-	-	-

** Shielded cable*

B				**Sc [mm^2]**		
Element	**P total [W]**	**P fase [W]**	**I fase [A]**	**20 > L [m]**	**20 ? L 35 [m]**	**35 ? L < 55 [m]**
T	-	-	-	4	6	10
N	-	-	-	4	6	10
L1-L2-L3	14463	4821	254	4	6	10

KIT 16412CE

A			
Element	**P total [W]**	**P phase [W]**	**I phase [A]**
R	6000	2000	9.0
P.F	820	820	3.8
P.1	1810	603	3.2
P.2	1810	603	3.2
P.3	0	0	0.0
B	1300	433	3.8
PTC	-	-	-
F	-	-	-
T	-	-	-

** Shielded cable*

B				**Sc [mm^2]**		
Element	**P total [W]**	**P phase [W]**	**I phase [A]**	**20 > L [m]**	**20 ? L 35 [m]**	**35 ? L < 55 [m]**
T	-	-	-	4	6	10

N	-	-	-	4	6	10
L1-L2-L3	14463	4821	25,4	4	6	10

KIT 04015CE

A			
Element	**P total [W]**	**P phase [W]**	**I phase [A]**
R	6000	2000	9.0
P.F	600	600	2.7
P.1	1050	1050	4.9
P.2	0	0	0.0
B	1300	433	3.8
PTC	-	-	-
F	-	-	-
T	-	-	-
T	-	-	-

** Shielded cable*

B				**Sc [mm^2]**		
Elemento	**P total [W]**	**P fase [W]**	**I fase [A]**	**20 > L [m]**	**20 ? L 35 [m]**	**35 ? L < 55 [m]**
T	-	-	-	2.5	4	6
N	-	-	-	2.5	4	6
L1-L2-L3	9012	3483	17,7	2.5	4	6

KIT 05135CE

A			
Elemento	**P total [W]**	**P fase [W]**	**I fase [A]**
R	6000	2000	9.0
P.F	820	820	3.8
P.1	1460	1460	6.8
P.2	0	0	0.0
P.3	0	0	0.0
B	1300	433	3.8
PTC	-	-	-
F	-	-	-
T	-	-	-

** Shielded cable*

B				**Sc [mm^2]**		
Elemento	**P total [W]**	**P fase [W]**	**I fase [A]**	**20 > L [m]**	**20 ? L 35 [m]**	**35 ? L < 55 [m]**

T	-	-	-	2.5	4	10
N	-	-	-	2.5	4	10
L1-L2-L3	9642	3893	19.6	2.5	4	10

HEATER CONNECTION

The connection of the PTC sensor must be made via an own channel in order to avoid possible interferences. Connect the Heater power supply to the electrical control board as follows:

- Open the rear housing of the Heater
- Connect the following outputs with the corresponding inputs of the electric control box.
- Neutral and Ground remain free:

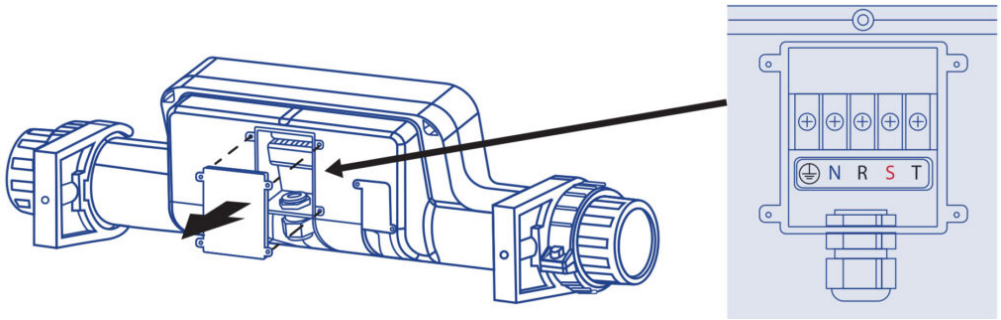

PRINTED CIRCUIT BOARD

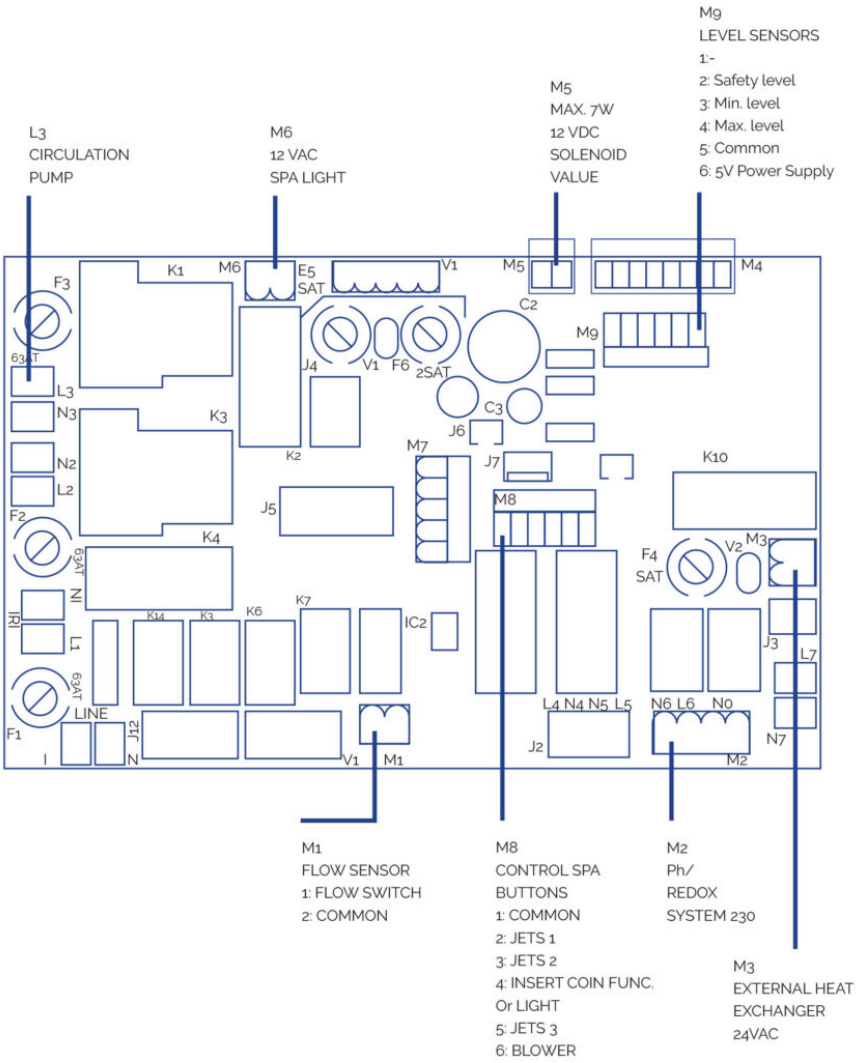

REMOTE SPA PUSH BUTTONS CONNECTION

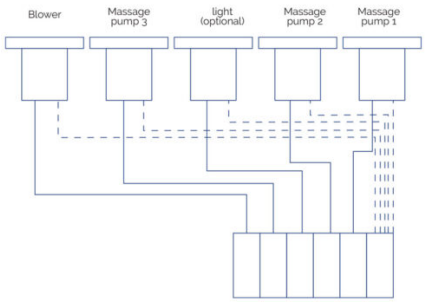

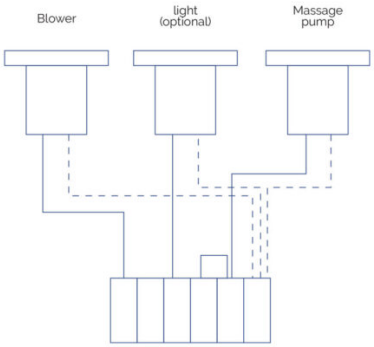

LIGHT

Connect directly to the M6 output of the PCB. Can be switched off or on from the front control panel of the electrical box.

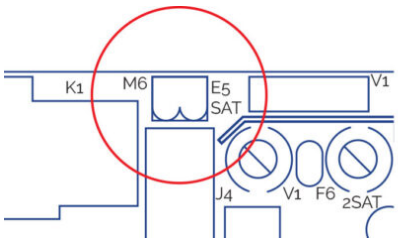

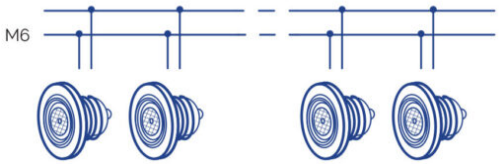

OTHER ELECTRICAL CONNECTIONS

- Connect the three level sensors supplied with the balance tank directly to the M9 input of the PCB.
- ?Connect ozone wire directly to the grid 5-6 input of the electrical box.
- Connect the electric control box to the power supply.

ATTENTION
Make sure all the hydraulic and electrical / electronical connections are done before connecting the electric control box to the power supply.
It is mandatory to use packing glands for all the connections coming out of the cabinet and the junction box, and to use terminals in all connections in order to preserve the integrity of the leads.

3.6. Hydraulic connection

The compact kit must be below the Spa level. This avoids having to prime the pumps. The maximum difference in level is 2 metres below (h ?2m).

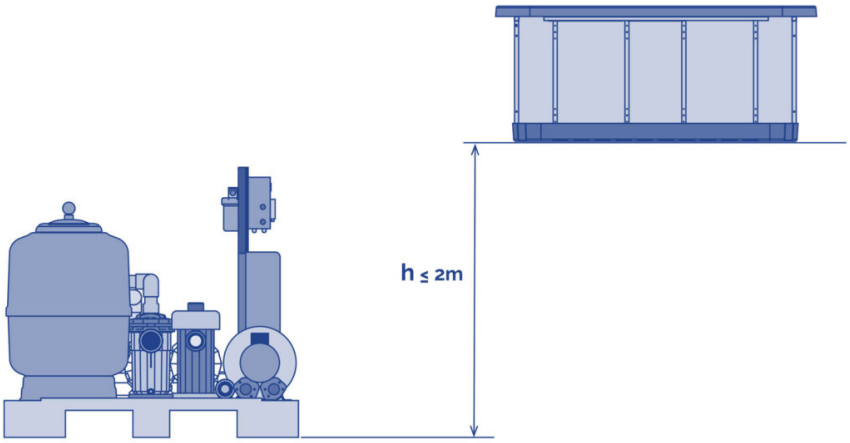

Spas with overflow have a balance tank, which has a double function:

- Absorbing the water displaced by the people who enter the Spa.
- Ensuring the filtration pump is never left without water.

To correctly install this tank, it should be placed as near as possible to the Spa, below the level of the overflow, so that the overflow can evacuate all the water.

KIT TO SPA CONNECTION

Use a hard pipe or flexible hose of an appropriate resistance. Check the regulations in force in each country.

You must use the same pipe diameter as that of the Spa’s connection; these diameters are sized for optimal performance of the kit. Use the right glue for each material. In any case, it will be necessary to minimize the installation of elbow fittings and pipe length to reduce the drop of pressure in the installation.

The Spa’s connections with couplings are marked with stickers indicating the circuit and the water flow direction.

Before and after each pump and on the heat exchanger outlet, place a ball or guillotine valve for carrying out maintenance or replacements on these elements.

Recirculating circuit connection

SPA WITH OVERFLOW

Spa Connection – Balance Tank

Connect the overflow pipes to the balance tank. The pipes should be sloping sufficiently to ensure the water evacuates by gravity. Under no circumstance should siphons be created that could prevent water circulation. The diameter of the pipes for collecting water from the overflow should be calculated in such a way that the water does not exceed the recommended speed by the regulations in force. Connect a drainpipe in the upper part of the balance tank; its function is to evacuate possible excess water preventing the deposit from overflowing. Connect the balance tank outlet with the filter pump suction, placing a check valve between the deposit and the pump.

The outlet will have to be placed below or at the same level as the bottom of the balance tank. Spa with overflow.

Connection between Balance Tank – Compact Kit

Connect the filter pump outlet to the filter’s selector valve (depending on the kit model, this connection may already been made). Connect the selector valve outlet with the water inlet of the heat exchanger (depending on the kit model this connection may already be made). If your Spa has the ozone option, follow the instructions indicated in the Ozoniser installation sheet now.

For the selector valve connections, always use plastic accessories, gasket and Teflon tape. Under no circumstance should you use metal accessories or tubing, which could seriously damage the plastic components.

Connection between Spa – Compact Kit

If your spa has a spa floor cleaning connection; connect the floor cleaning outlet with the filter pump inlet making the connection in parallel with the other inlets to this pump. You must place a ball valve between the outlet and the pump which will normally remain closed.

- Option A Spa Floor Suction: Connect the Spa floor drain to an inlet in parallel to the filter pump. Place a ball or guillotine valve between this connections.
- Option B Spa Floor Return: No operation is required.

Connection between Compact Kit – Spa

Connect the heat exchanger with the Spa filter return sleeves.

- Option A Spa Floor Suction: Place a check valve between the exchanger outlet and the inlet to the spa.
- Option B Spa Floor Return: Connect the exchanger outlet with the Spa floor drain, in parallel with the filter return via the return nozzles.

Installation of level sensors

In order to ensure that the recirculating circuit always contains water, you must install the level senors in the balance tank. These will control the opening and closing of a filling solenoid valve.

Look at the following diagram.

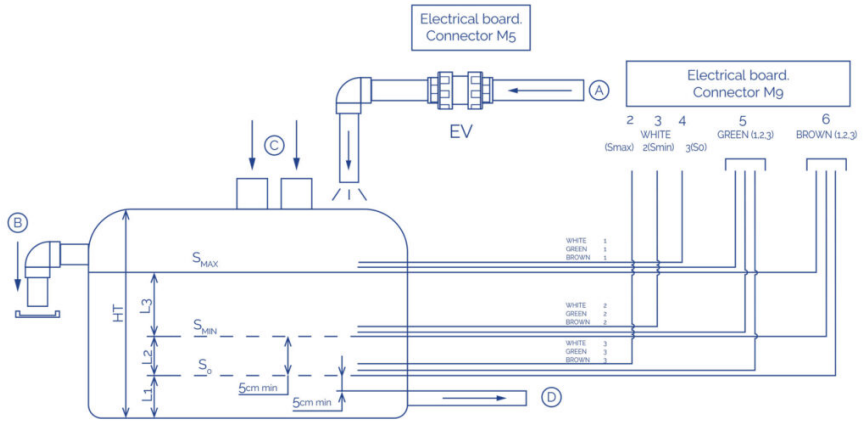

So	Safety probe	A	Network water inlet
SMIN	Mínimum level probe	B	Deposit overflow
SMAX	Maximum level probe	C	Spa overflow water inlet
EL	Electric control box	D	Water outlet towards filtration
EV	Electric valve (not included)	Ht	Total height

S0 sensor has to be placed above the bottom outlet pipe.

Smin sensor has to be placed above S0 sensor.

There must be more water than the volume displaced by all bathers between Smin and Smax. Smax has to be placed below the top drain..

The level sensors have to be attached to outer side of the balance tank.

The system will be automatically blocked when water level is below so sensor.

The electric valve (EV) will be activated (the tank will start filling) when the level drops to below SMIN and will be deactivated when it exceeds SMAX.

If you do not install level sensors, follow the next diagram.

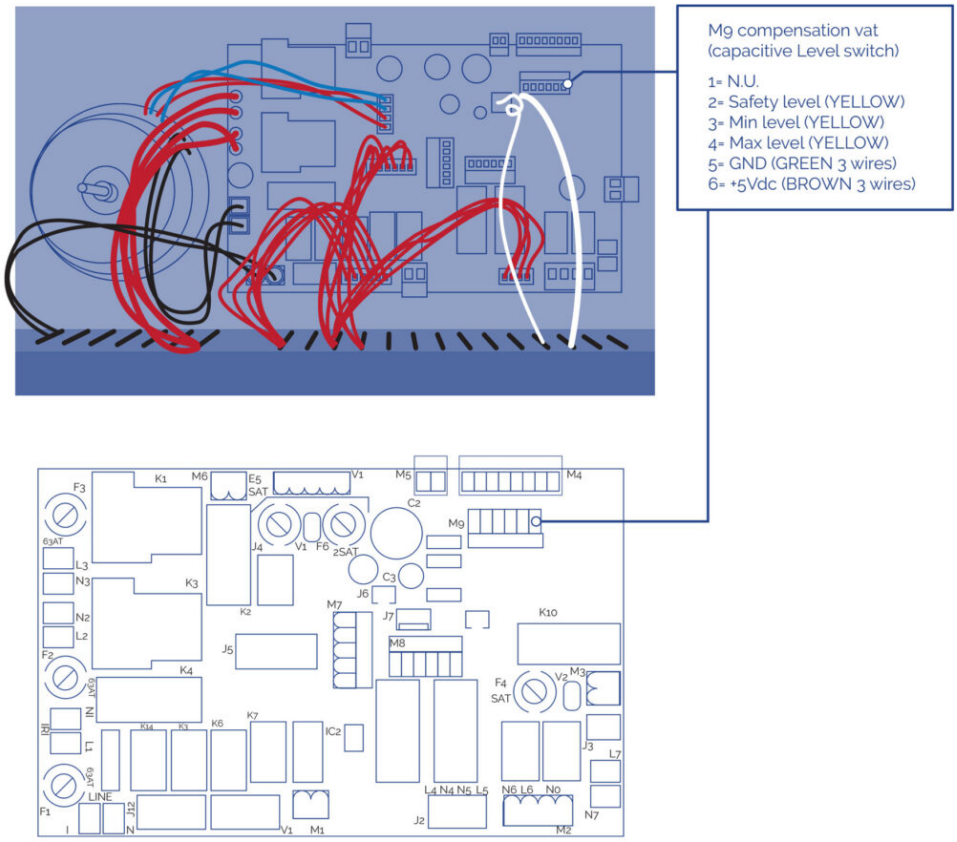

SPA WITH SKIMMER

Connection Spa - Compact Kit

- Connect the skimmer outlet with the heat exchanger inlet.
- Connect the Spa floor drain with the filtration pump inlet in parallel to the rest of the inlets.
- Connect the filtration pump outlet to the filter's selector valve (depending on the kit model, this connection may already be made).
- Connect the selector valve outlet to the water inlet of the heat exchanger (depending on the kit model, this connection may already be made).

If your Spa has the ozone option, follow the instructions indicated in the Ozonator installation sheet now.

For the selector valve connections, always use plastic accessories, gasket and Teflon tape. Under no circumstance should you use metal accessories or tubing, which could seriously damage the plastic components.

Connection Compact Kit– Spa

Connect the heat exchanger outlet with the Spa's filter return nozzles, placing a check valve in this connection.

Water massage circuit connection

Connect the pipe to the water suction drains with the inlet to the massage pump (each pump will suction the water of 2 drains). Connect the outlet of each of the massage pumps to the connections in the Spa battery that will guide the water to the jets. Place a ball or guillotine valve in the inlet and outlet of each pump.

Air massage circuit connection

Leave the air pump inlet free and connect the pump outlet to the Spa's corresponding connection.

Note: It is essential to install a 150mm siphon above the maximum water level and to place a check valve between the siphon and the Spa.

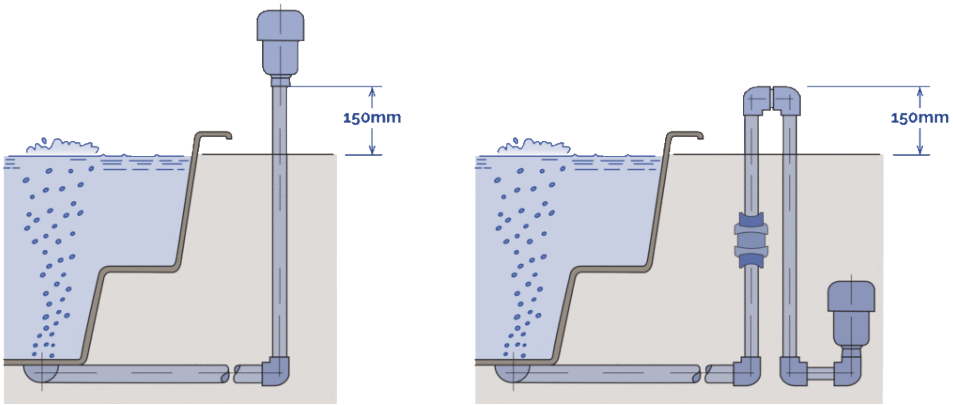

4. Start up

With the main circuit breaker on the OFF position, clean the Spa shell to avoid particles of the works being absorbed and obstructing the components or circuits.

Open all the valves except the drainage.

SPAS WITH OVERFLOW AND BALANCETANK

Open the Spa's filling valve and fill up the Spa until the water exceeds the SMAX level of the balance tank by 5 to 8 cm.

Important: When you start up the filtering equipment for the first time, thewater level of the balance tank will decrease substantially. This is due to the fact that the piping between the balance tank and the Spa, filter and pump is practically full of air.

SPAS WITH SKIMMER

Wait for 15 minutes and inspect all the connections to ensure there are no leaks. Provide electrical power to the cabinet by switching on its main circuit breaker (ONposition). Start up the filter pump, the massage pump and the air pump and check that there are no leaks in the pipes and connection elements after 30 minutes of operation.

Stop the filter pump and fill the water filter up to half, and then subsequently fill with sand (the type of sand to be used is specified in the Filter Manual annexed to the Compact Kit).

Place the selector valve of the filter with the lever in the wash position. Manually activate the filter

pump; carry out a wash in the filter lasting approximately 2 minutes, stop the pump and set the lever to the rinse position. Start up the pump again and rinse for approximately 15 seconds.

Stop the pump and change the lever to the filter position. Fill up the Spa once again. Program the thermostat to the desired temperature. Read the Compact Kit manual. (Reaching the desired temperature after filling up the Spa may take several hours). Program the filter clock. (Read the Compact Kit Manual).

In the main electrical cabinet, activate the massage and heating switches. Set the filtering switch to the desired position, and the Spa will start to function carrying out the filtering and heating cycle. Once these checks have been made, fill in the attached Warranty form and send it to the manufacturer.

Jets can also regulate the intensity of the flow by opening and closing the water flow. To do so, proceed as follows:

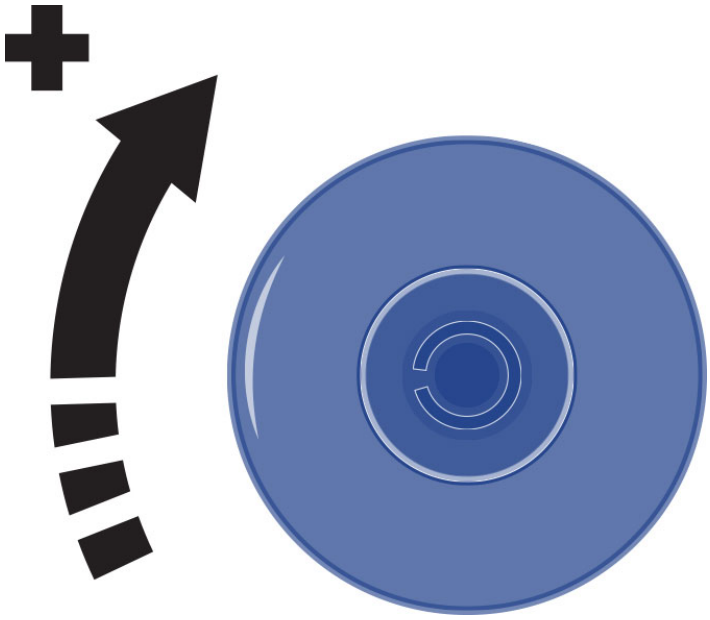

Spas are built to the highest standards with the most durable materials available. The right maintenance and care will be key factors to ensure your Spa and its components have a long life.

5. Operating instructions

5.1. Warnings

SAFETY WARNINGS

- Carefully check the water temperature. Do not use the water at temperatures over 40ºC. Ideal temperature is 35-36ºC
- ?Pregnant women, small children, persons with heart conditions, or health problems or under medical care must not use the spa without first consulting a doctor.
- Take special care if you are alone when using the spa. Prolonged immersion in warm water may cause nausea, dizziness and fainting.
- Set the spa at a lower temperature if you intend to use the spa for more than 10-15 minutes.
- Do not use the spa after drinking alcohol, taking drugs or medicines that cause drowsiness

or that can raise/lower the blood pressure.
- Be especially careful when getting in and out of the spa when the floor is wet.
- Electrical appliances (radios, hair dryers etc.) must not be used near the spa.
- During use of the spa, keep your head, body and clothes at a distance of at least 40 cm from the ? suction intakes. Long hair must be tied back and secured in place.
- Do not start the spa if the protective grilles are broken or missing.
- Only use original spare parts. Any modification requires manufacturer authorisation.
- Check the level off free chlorine and pH before use. Do not use the spa if these levels are out of normal recommended ranges or if a shock treatment is in process.

USE WARNINGS

Power supply interruption

Should the power supply be interrupted, the system will always automatically restart in the operating mode it was in before the interruption.

After a power outage the filtration pump will automatically start. Make sure the hydraulic circuit is ready or connect/disconnect necessary items before starting the system.

Incompatible functions

In order to prevent possible interferences between functions the system software doesn’t allow the following operations:

- When the filtration pump has been activated in manual mode it must also be manually deactivated before switching on any other pump, or the system will stop and E02 (error 02) will be shown in the main display. Push SET and MANUAL keys consecutively to deactivate the error message.
- All pumps must be switched off before switching from manual to automatic mode, or the system will stop and E02 (error 02) will be shown in the main display. Push SET and MANUAL keys consecutively to deactivate the error message.
- The filtration pump is always activated for the first 5 minutes after the system starts, and continues working until the programmed temperature is reached. The heater then shuts off and the filtration pump continues working for 5 more minutes in order to cool the heater to atmospheric temperature.
- The insert coin feature (optional) is not compatible with the light control via external button option.

RISK OF HYPERTHERMIA

- Prolonged direct contact with hot water can cause HYPERTHERMIA, which occurs when the internal temperature of our body reaches levels above the normal temperature of 36.5ºC.
- Symptoms of hyperthermia include a sudden drop in blood pressure and in consequence a feeling of faintness with the possibility of fainting.
- The Spawater should never exceed 40ºC.
- Water temperatures of between 37ºC and 40ºC are considered safe for adults who have no health problems. Lower temperatures are recommended for most people and for children.
- Remember that prolonged bathing in the Spa can cause hyperthermia.
- The use of alcohol, drugs or medication may increase the risk of hyperthermia.

5.2. Remote control (Spa buttons)

The pumps can be activated from the spa if the appropriate switches are installed. Each switch can control one or more pumps at once. Depending on the system's configuration.

- By pressing the corresponding switch the pump begins to operate and does not stop until the time programmed in parameter d1 (Units and Massage Setting Menu) is completed or the switch is pressed again.

- If the parameter d2 has been programmed with a value greater than 0 the pump may not be activated until this time has elapsed.
- Massage and inhibition time are independent for each switch.

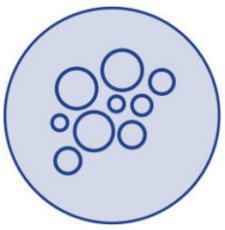

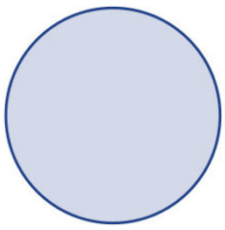

Air massage pump(s) remote activation
Water massage pump(s) remote activation
Light (option)

6. Maintenance

6.1. Maintenance warnings

- Before proceeding to carry out any electrical or mechanical intervention, please ensure the machine is disconnected from the power supply network and that the start up devices are blocked.
- Do not handle the equipment withwet feet.

6.2. Acrylic maintenance

Easy care for an elegant surface:

- Use common cleaners for general use. For normal care and cleaning, use a soft cloth or sponge with a little soap and water. Rinse it well, and dry with a clean, dry cloth. If you are using a household cleaner, please ensure it is recommended for acrylic surfaces by the manufacturer.
- Never use abrasive cleaners.
- Do not allow the acrylic surface to come into contact with ketones or esters such as acetone, acetates (such as nail varnish remover, nail varnish or dry cleaning substances) or any organic solvent with chlorine, varnishes, petrol, aromatic solvents, etc.
- Remove dust, smears and dry dirt with a soft, moist cloth.
- Clean off grease, oil, paint and ink stains with isopropyl alcohol and dry it with a clean, dry cloth.
- Avoid using razors or any other kind of sharp instrument that could scratch the surface.

Small scratches can be removed by applying a fine layer of automotive varnish and lightly polishing it with a clean cloth.

Once a week, clean the area of the Spa which is not underwater with a quality polish for Spas.

ATTENTION
Remember to never leave the Spa uncovered, empty and exposed to the sun, as it could cause damages that the warranty does not cover.

6.3. Maintenance in periods of non-use or absence

SHORT PERIODS (3-5 days)

- Adjust the pH and treat the water (see Water Maintenance section).
- Cover the spa.
- Before using the Spa again, readjust the pH and treat the water again.

PROLONGED PERIODS (5-14 days)

- Set the temperature at its lowest level.
- Adjust the pH and treat the water (see Water Maintenance section).
- Cover the Spa.
- Before using the Spa again, reset the temperature as required , readjust the pH and treat the water again.

PREPARTING FOR THE WINTER PERIOD

If it is not planned to use the Spa through the winter season or for prolonged periods of time, the following operations should be done:

- Disconnect the electrical equipment.
- Empty the water from the Spa.
- Leave the drain valve open.
- Clean and dry the Spa.
- Cover the Spa.

You should not leave water in the Spa without an electrical connection outdoors in temperatures below 0ºC, given that the pipes could freeze and damage the Spa.

It is necessary to comply withRegulations in force in each country regarding Legionella. All responsibility for compliance with these falls on the owner of the Spa.

6.4. Water maintenance

Water maintenance is one of the areas where the user should provide greatest attention, given its importance. This maintenance will depend on the mineral content of the water used, of the Spa’s frequency of use, and of the number of people using the Spa.

There are three main points to take into account inwater maintenance:

• WATER FILTRATION

• CHEMICAL ANALYSIS AND PH CONTROL

• DISINFECTION OF THE WATER

SAFETY IN USE OF CHEMICAL PRODUCTS

Before using any chemical product, carefully read the instructions for use on its product label.

- It is advisable that always the same person handles the chemical products. Keep these products away from children.
- Add the exact amounts to the water, as specified.
- Keep containers tightly closed in dry, well-ventilated places.
- Do not inhale chemical products, and take care not to let them come into contact with the eyes,? nose or mouth. Wash hands after use.
- Follow the emergency instructions on the product label in the event of an accident or ingestion.
- Do not smoke while handling these products – they may be flammable.
- Do not store these products inside the Spa unit.
- Do not mix products. Add first one and then the other to the water, to avoid possible reactions.
- Do not add chemical products to the water if there is someone in the Spa.

PH ADJUSTMENT

A pH index of between 7.2 and 7.6 is recommended.

The pH level measures the acidity and alkalinity: Values above 7 are alkali and below 7, are acid.

ATTENTION
It is very important to maintain the correct pH level both for the disinfectant to work properly and to prevent corrosion or deposits on the Spa. Any damage caused by an inadequate pH level is not covered by your Spa guarantee.

If the level of pH is very low, the effects are as follows:

? The disinfectant will dissolve rapidly.

? The Spa kit may start to showcorrosion.

? The water may start to produce irritation in bathers.

If the level of pH is very high, the effects are as follows:

? The disinfectant is less effective.

? The acrylic and the kit may start to showscaling.

? The water may turn cloudy.

? The filter cartridge pores may be obstructed.

?

Check the pH of the water with the pH analyser case on a daily basis.

If the pH is above these indexes, use pH MINOR SPA.Wait for two hours before doing the pH test. When the pH index has been adjusted to the values indicated above, proceed to the next step.

WATER DESINFECTION

Disinfecting the water is of utmost importance in order to destroy algae, bacteria and any other organisms that may grow in the water. However, excessive disinfection can cause irritations to the skin and eyes.

The appropriate disinfectant for your Spa water is BROMINE TABLETS. Place this product in the pre-filter for it to gradually dissolve.

Check the level of residual bromine using the Br analyser case on a daily basis.

Residual bromine levels of between 2.2 and 3.3 ppm are recommended.

Should you use Chlorine, in order for it to be effective, you must maintain a concentration of Free Residual Chlorine of between 0.5 and 1.5 ppm.

USE OF SPECIAL PRODUCTS

In addition to products for maintaining pH and disinfectant levels, there are others especially designed for use in Spas which will help you to maintain the water and the installations in perfect conditions.

- TIMESCALE REMOVER FOR SPAS: Avoids the formation of calcium salts (scaling), especially in hard water. This product is added weekly and every time the water is renewed.
- ALGAECIDE FOR SPAS: This algaecide prevents the growth of algae in the Spa water. The product is added weekly and every time the water is renewed.
- FOAM REMOVER FOR SPAS: Due to the agitation of the water and the grease present in it, foam often forms in Spas. When ever you notice a significant amount of foam in the water, you can eliminate it with this product.
- ?GREASE REMOVER FOR SPAS: For eliminating the rings of dirt and grease that form on the walls of the Spa. To use this product we advise emptying the water from the Spa, and applying the grease remover with a sponge on the areas to be cleaned. Then rinse immediately with abundantwater.

OZONE GENERATOR

Ozone, O3, is an oxidising chemical component which is very effective in disinfecting water. Its main advantage is that it leaves no chemical residue and is odourless.

Its disinfectant properties are based on its oxidising potential, which leads to the elimination of any organic matter that there may be in the water.

In order to produce ozone, some Spas have an ozonator which, with electricity, can produce ions of ozone from atmospheric oxygen. This process occurs automatically, and the product generated is injected via the filtration return nozzles. Thus, it is not necessary for the user to activate any mechanism for its generation.

The water is collected by the overflow, the drains or the skimmer, due to the suction of the filter pump.

Then it passes through the heat exchanger and in its outlet it is injected with ozone. The water is distributed via the filtration return system.

Ozone treatment does not exclude the use of other chemical products such as Bromine or Chlorine.

The ozone is considered as a complementary process to the ones above, thus reducing the consumption of Bromine or Chlorine.

QUICK GUIDE FOR CHEMICAL PRODUCT APPLICATION

	Reason for use	**Amounts per m^3 of water**	**Frequency of use**
PH MINOR SPA	Add if the pH test comes out above recommended values (7.2-7.6 ppm).	Add according to recommendations of the chemical product manufacturer.	Analyse the pH daily with the pH Test.
PH MAJOR SPA	Add if the pH test is below recommended values (7.2-7.6 ppm).	Add according to recommendations of the chemical product manufacturer.	Analyse the pH daily with the pH Test.
BROMINE TABLETS	Add if the Br test is above recommended values (3-5 ppm).	Add according to recommendations of the chemical product manufacturer.	Analyse the Br daily with the Br. Test.
LIME SCALE REMOVER	Avoid the formation of calcium salts (scaling).	Add according to recommendations of the chemical product manufacturer.	Once per week, and each time the water is renewed.
ALGAECIDE FOR SPAS	Prevents the growth of algae in the water.	Add according to recommendations of the chemical product manufacturer.	Once per week, and each time the water is renewed.
SE REMOVER	Eliminate rings of dirt on the Spa walls.	Scrub with a sponge and immediately rinse with abundant water.	Whenever dirt is observed on the Spa walls.

FOAM REMOVER	Presence of foam in water.	Add according to recommendations of the chemical product manufacturer.	Whenever foam appear in the water.

7. Error codes

The following table summarize the errors codes the display shows to the operator and the related description.

Type	Description	Cause	Solution
E01	Safety level of balance tank not reached. Autoresettable.	The Safety level sensor of the balance tank doesn’t detect water. No function can be activated.	Fill the balance tank until minimum sensor level.
E02	Water flow or temperature failure. Automatically self-operational alarmAutoresettable.	Flow sensor doesn’t detect water flow or temperature sensor doesn’t send any signal. No function can be activated.	Check possible obstructions in the filtering circuit, pumps, or filter. Check possible sensor malfunction.
E04	Water temperature is too high. Automatically self-operational alarm Autoresettable.	The water temperature inside the Spa is over 42°C. No function can be activated	Let the water cool or add cool water. When the temperature will be below 42°C your SPA will start up automatically; if not unplug the power supply and contact your dealer.
E05	Water temperature sensor.Autoresettable.	The temperature sensor is malfunctioning. No function can be activated.	Check the water temperature and temperature sensor and replace it if needed.
E07 E08	Heater contactors. Not Autoresettable.	The heater contactors are malfunctioning; you cannot activate the electrical heater.	For safety reasons, the electric heater is powered by two contactors, which are serially connected; if one of these two contactors is stuck, an error message will appear. Replace corresponding contactors and plug the elements again.

E09	Max. time of the balance tank water filling exceeded.Not Autoresettable.	The max opening time (30') of the loading electrovalve of the balance tank has been reached	Make sure that the sensors of water level of the balance tank work properlyMake sure that the discharge hole has been left open.Check a possible water leakage in the hydraulic circuit.
E010	Balance Tank Water levels signals are incompatibles.Autoresettable.	Water level sensors are sending incompatible signals.	Check position of the level sensors or replace them if they are malfunctioning.
E011	Water level in the balance tank is below safety sensor. Autoresettable.	Some function is trying to be activated before the minimum level inside the balance tank has been reached (or when working, the level is below the safety sensor).	Make sure that the loading electrovalve is open and works properly. Make sure there's no obstruction in the water charging circuit. Verify there's no water leakage in the hydraulic circuit.
E0 Cn	Communication between Panel Control Board and local keypad.	Communication between Panel Control Board and local keypad is lost.	Make sure that the cable between the local keypad and the Panel Control Board is connected properly. If it is, unplug the system from the mains and get in touch with your dealer.

8. Problems and solutions

Problem	**Reason**	**Solution**
No element is activated.	Circuit breaker on OFF position.	Switch circuit breaker to ON.
No pump or heating is activated.	Operating switch in OFF position.	Change operating switch to ON.

FILTER

Low water flow during filtration.	Obstructed or dirty filter.	Wash filter.
Filter pump is not activated.	Filter pump faulty.	Check pump / Change brushes.

	Faulty or poorly connected contactor.	Installer: Check connection wires. Change contactor.
	Poorly regulated thermal magnetic breaker.	Adjust thermal magnetic breaker according to motor consumption.
	Faulty thermal magnetic breaker.	Change thermal magnetic breaker.
	Pump selector on stop.	Change to manual or automatic.

WATER MASSAGE

Massage pump is not activated.	Signal transmission cable disconnected.	Conectar el tubito* / cable.
	Air bulb in push button damaged.*	Change bulb.*
	Faulty pump.	Check pump / Change brushes.
	Faulty or poorly connected ontactor.	Installer: Check connection cables. Change contactor.
	Poorly regulated thermal magnetic breaker.	Adjust thermal magnetic breaker according to motor consumption.
	Faulty thermal magnetic breaker.	Change thermal magnetic breaker.
	General massage switch on OFF.	Set switch to ON.
Low air flow in jets. Water comes out the Venturi jet.	Closed and obstructed venturis.	Open Venturis. Eliminate obstructions
	Incorrectly placed jet front	Check jets

AIR MASSAGE

The massage pump is not activated.	Signal transmission wire disconnected.	Connect the cable.
	Air bulb in push button damaged.*	Change bulb.*
	Faulty pump.	Check the pump / Change brushes.
	Faulty or poorly connected contactor.	Installer: Check connection wires. Change contactor.
	Badly regulated thermal magnetic breaker.	Adjust thermal magnetic breaker according to motor consumption.
	Faulty thermal magnetic breaker.	Change thermal magnetic breaker.
	General massage switch on OFF.	Change switch position to ON.

HEAT EXCHANGER

The thermostat does not indicate the correct temperature.	Poorly fitted temperature probe.	Fit the probe properly into its housing.

	Faulty temperature probe.	Change the probe.
	Temperature controller damaged.	Change controller.
No hot water.	Heat exchanger badly wired / defective.	Check wiring resistance / Change Heat exchanger.
	Contactor damaged or bad connection.	Installer: Check wiring connection. Replace contactor.
	Magneto - thermal damaged.	Change magneto -thermal.
	Exchanger switch OFF.	Turn switch to ON.
	Flow switch bad wired / damaged.	Check wiring flow-switch / Change flow switch.
	Safety thermostat detect T>65ºC.	Reset safety thermostat

* Only in the case of pneumatic push buttons.

9. Recycling and environment

Your Spa contains electrical and/or electronic material. When it reaches the end of its useful life, it must be treated as specialwaste.

Contact your local authorities to find out about the procedure for collecting and treating waste containing electrical and electronic material.

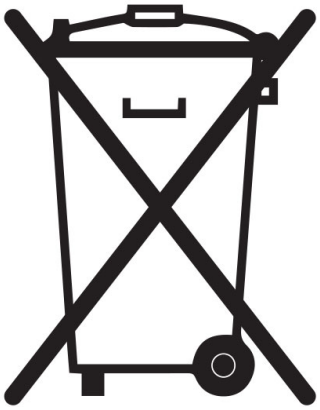

10. Evidence of conformity

iberspa

IBERSPA, S.L.
Pol. Ind
Av. Pla d'Urgell 2-8
25200 - Cervera, Lleida
(Spain)

ES	**PRODUCTOS:**	**DA**	**PRODUKTER:**
EN	**PRODUCTS:**	**S**	**PRODUKTER:**
DE	**PRODUKTE:**	**FI**	**TOUTTEET:**
FR	**PRODUITS:**	**N**	**PRODUKTER:**
IT	**PRODOTTI:**	**GR**	**ΠΡΙΟΝΤΑ:**
PT	**PRODUTOS:**	**PL**	**PRODUCTY:**
NL	**PRODUKTEN:**		
RU	**продукт:**		

PUBLIC SPAS
PUBLIC COMPACT KITS

ES - DECLARACION DE CONFORMIDAD
Los productos arriba mencionados se hallan conformes a : Directiva 2014/30/UE (Compatibilidad Electromagnética), Directiva 2014/35/UE (Baja Tensión) y la Norma Europea EN 60335-2-41

EN - EVIDENCE OF CONFORMITY
The products listed above are in compliance with : 2014/30/EU (Electromagnetic Compatibility), Directive 2014/35/EU (Low Voltage) and with the European Standard EN 60335-2-41

DE - KONFORMITÄTSERKLÄRUNG
Die oben angeführten Produkte entsprechen den, Sicherheitsebestimmungen der Richtlinien der Elektromagnetischen Verträglich 2014/30/EU , der Niederspannungs Richtlinien 2014/35/EU, un der europäischen Vorrschrift EN 60335-2-41

FR - DECLARATION CONFORMITÉ
Les produits mentionnés ci-dessus sont conformes aux : Directive Compatibilité Electromagnétique 2014/30/UE , Directive Basse Tension 2014/35/UE et à la Norme Européenne EN 60335-2-41

IT - DICHIARAZIONE DI CONFOMITÀ
I prodotti su elencati sono conformi alle seguenti : Directtiva 2014/30/UE (Compatibilita elettromagnetica), Directtiva 2014/35/UE (Bassa Tensione) e alla Norma Europea EN 60335-2-41

PT - DECLARAÇÂO DE CONFORMIDADE
Os produtos acima mencionado estâo conforme a : Directiva 2014/30/UE (Compatibilidade Electromagnética), Directiva 2014/35/UE (Baixa tensâo) e a Norma Europeia EN 60335-2-41

NL - CONFOMITEITSVERKLARING
Bovenstaande produkten voldoen aan de veiligheidsvoorschriften van de,Richtlijn Electromagnetische compatibiliteit 2014/30/EU , laagspannings richtlijn 2014/35/EU en aan de Europese norm EN 60335-2-41

RU - ДЕКЛАРАЦИЯ СООТВЕТСТВИЯ
Упомянутые выше модели соответствуют: Директиве 2014/30 / ЕС (об электромагнитной совместимости), Директиве 2014/35 / ЕС (о низком напряжении) и Европейском стандарте: EN 60335-2-41

DA - FÖRSÄKRAM OM ÖVERENSSTÄMMELSE
Ovans ende produkter à i överenstämmelse med : Direktiv 2014/30/EU (Elektromagnestik kompatibilitet), Direktiv 2014/35/EU (L gspänning) och med Europeisk Standard EN 60335-2-41

S - OVERENSSTEMMELESESERKL RING
Ovenst ende produkter oppfyller betingelsene elektromagnetiskdirektiv 2014/30/EU , lavpenningsdirektiv 2014/35/EU, og Europeisk Standard EN 60335-2-41

FI - OVERENSSTEMMELSESERK RING
De ovenn vnte varer er i overensstemmelse med : Direktiv- 2014/30/EU (Elektromagnetisk forenelighed), Direktiv- 2014/35/EU (Lavsp nding) og i overensstemmelse med den europ iske standard EN 60335-2-41

N - VAKUUTUS YHDENMUKAISUUDESTA
Yllämainiut tuotteet ovat yhdenmukaisia direktiivin 2014/30/EU (Elektromagneettinen yhdenmuskaisuus), direktiivin 2014/35/EU (Matalajännite)sekä eurooppalaisen standarin EN 60335-2-41

GR - ΑΗΑΩΣΗ ΣΥΜΒΑΤΟΤΗΤΑΣ
Τα παραπα΄νω προτόντα είναυ συμφωνα με την Οδηγία 2014/30/ΕΕ , (Ηλεκτρομαγνηυκης Συμβατστηταζ) την Οδηγία 2014/35/ΕΕ (Χαμηλης Τασηζ) κου ε τον Ευρωπατκό Κανονισμ

EN 60335-2-41

PL - DEKLARACJA ZGODNOŚCI
Wymienione powyżej produkty są zgodne z: Dyrektywą 2014/30/UE (Kompatybilność Elektromagnetyczna), Dyrektywa 2014/35/UE (Niskie Napięcie) oraz Norma Europejska: EN 60335-2-41

Firma/Cargo:
Signature/Qualification:
Unterschrift/Qualifizierung:
Signature/Qualification:
Firma/Qualifica:
Assinatura/Título:
Handtekening/Hoedanigheld:
подпись / квалификация:

Namnteckning/Befattning:
Underskrft / Stilling:
Signatur/Tilstand:
Allekirjoitus/Virka-asema:
Υπραφη/Θεση:
Podpisu/Stanowisko:

Gerente de Iberspa, S.L. P.P
Manager of Iberspa, S.L. by proxy

© Iberspa, 2024